pulsar 200NS

BAJAJ
Distinctly Ahead

pulsar 200NS

Bajaj Auto Limited
Akurdi Pune 411 035 India

Tel +91 20 27472851
Fax +91 20 27407385
www.bajajauto.com

Spare Parts Catalogue

Notice

All information contained in this manual is based on the latest product information at the time of publication. Bajaj Auto Limited accepts no liability for any inaccuracies or omissions in this publication, although every possible care has been taken to make it as complete and accurate as possible. All procedures and specifications subject to change without prior notice. The right is reserved to make such changes at any time without prior notice and without incurring an obligation to make such changes to product manufactured previously. Contact your authorized Bajaj Dealer for the latest information on product improvements incorporated after this manual was issued.

DOC. NO.: 71111474 **REV. 01, Apr 14**

Copy rights : All rights reserved. No part of this publicatin may be reproduced, stored in a retrival system, Or transmitted in any form or by any means, electromic mechanical photocopying, recording or otherwise, without the prior written permission of Bajaj Auto LTD.

Foreword

We have pleasure in presenting the Spare Parts Catalogue for **'Pulsar 200 NS'** Motorcycle. This catalogue has been specially designed to assist you in selecting the correct parts for procurement to maintain 100% availability.

The Bajaj spares are subjected to the stringent quality control standards to ensure longer life of the vehicle. It is therefore necessary that only the Genuine Bajaj Spares are used.

In a continual effort to improve Performance and Efficiency of the vehicles, Specifications, Diagrams, Illustrations and Part Numbers can change without notice. Consequently, the description in this Spare Parts Catalogue cannot therefore be final and binding on us.

The modifications / alterations which are carried out after the issue of this catalogue, will be conveyed to you through our Service Circulars. You are requested to make necessary corrections in the Parts Catalogue as per the circulars so as to keep your catalogue up-to-date. This will ensure the appropriate and speedy delivery of the Spare Parts as the order placed will bear the latest part numbers.

In case, if you need any technical assistance contact the concerned Regional Office or write to us on the following address :

Bajaj Auto Limited
Service Department
Akurdi, Pune 411 035 India
Phone : 020-27406557
Fax : 020-27407385

Instructions

1. **How to Read the Catalogue :** Open the catalogue and from the pictorial index locate the group in which the part you want to find is present. Turn over to the concerned page number (as given by pictorial index). Now find out the figure of the part you wish to order. Write down the part number against that particular figure number from the text.

   In case, if you have the part number and you need the other details, the part index can be used. The part index (at the end of the catalogue) will give you the figure and page number of the part you wish to order.

2. **How to Order Spare Parts :** The part number and the description of the part required should be invariably mentioned in the order as per the catalogue text.

   The latest part number as conveyed through our service circulars should only appear on the order. In case of ordering painted components, colour shade of the components should be mentioned.

   The quantity shown against the part number is the quantity per vehicle for that group so that particular quantity should be multiplied by the number of sets required.

3. **Part Number System :** We have used 8 digit system for part numbers. The model or hardware item is indicated by first two digits or alphanumeric, the next two or four digits indicate main group and the last four or two digits indicate serial number in main group or serial number or subgroup of fastener respectively. Thus the part numbers will be indicated by 2-2-4 or 2-4-2 digit system. Understanding this system will enable you to identify the spare parts easily.

4. **Abbreviations :** The following abbreviations are used in this catalogue.

Assly	Assembly	V	Volts
N.I.	Not illustrated	W	Watts
C'case	Crankcase	Accl.	Accelerator
Cyl	Cylinder	Comp.	Complete
O/s	Over size	Fr.	Front
Rr.	Rear	Std.	Standard
L	Length	A/t.	Alternate
R.H.	Right hand	L.H.	Left hand
Hex.	Hexagonal	AR	As required

Index

Plate No.	Description	Page No.
1	Cover Cylinder Head	2
2	Cylinder Head	4
3	Valve	6
4	Camshaft / Tensioner	8
5	Cylinder and Piston	10
6	Crankshaft	12
7	Transmission	14
8	Change Drum / Shift Fork	16
9	Gear Change Mechanism	18
10	Engine Assly / Crankcase RH	20
11	Crankcase LH	22
12	Balancer Idler Gear / Water Pump	24
13	Oil Pump	26
14	Radiator	28
15	Cover Clutch	30
16	Cover Magneto	32
17	Clutch Assly	34
18	Carburettor	36
19	Air Cleaner Complete	38
20	Silencer Assly	40
21	Starter Assly	42
22	Magneto, C.D.I. & H.T. Coil	44
23	Seat Assly / Seat Lock	46
24	Engine Mountings	48
25	Frame and Frame Fitting	50
26	Swing Arm / Rear Shock Absorber	52
27	Pillion Foot Rest / Holder	54
28	Mudguard- Front & Rear	56
29	Stand Assembly	58
30	Tyre/ Tube / Rim	60

Index

Plate No.	Description	Page No.
31	Front Hub	62
32	Front Master Cylinder	64
33	Front Disc Brake	66
34	Rear Hub	68
35	Rear Disc Brake System	70
36	Rear Brake Pedal	72
37	Handle Bar Assly	74
38	Front Fork	76, 78
39	Painted Parts & Decals	80, 82
40	Radiator Cover	84
41	Petrol Tank, Cap Tank & Gauge Fuel	86
42	Fittings - Petrol Tank, Side Cover & Cover Seat	88
43	Meter Assly.	90
44	Control Cables	92
45	Chain Case	94
46	Head Lamp & Fairing	96
47	Indicator Light Assly.	98
48	Tail Lamp Assly. / Front No. Plate	100
49	Electrical Equipments	102
50	Tool Kit	104
51	Accessories / Grab Handle	106
	Kits List For Pulsar 135 LS	107, 108
		109
	Amendment Sheet (Parts Added)	111
	Amendment Sheet (Parts Deleted)	112
	Part Index	

Pictorial Index

PLATE NO. : 1 COVER CYLINDER HEAD	PAGE NO. 1
PLATE NO. : 2 CYLINDER HEAD	PAGE NO. 3
PLATE NO. : 3 VALVE	PAGE NO. 5
PLATE NO. : 4 CAMSHAFT / TENSIONER	PAGE NO. 7

Pictorial Index

PLATE NO. : 5 CYLINDER & PISTON	PAGE NO. 9
PLATE NO. : 6 CRANKSHAFT	PAGE NO. 11
PLATE NO. : 7 TRANSMISSION	PAGE NO. 13
PLATE NO. : 8 CHANGE DRUM / SHIFT FORK	PAGE NO. 15

PLATE NO. : 9 GEAR CHANGE MECHANISM	PAGE NO. 17

PLATE NO. : 10 ENGINE ASSLY & CRANKCASE RH	PAGE NO. 19

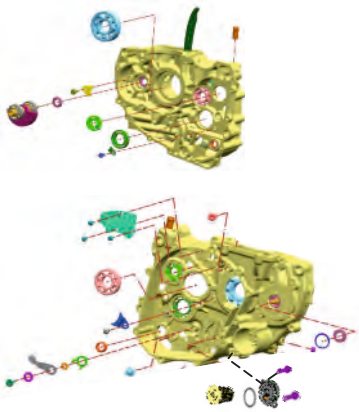

PLATE NO. : 11 CRANKCASE LH	PAGE NO. 21

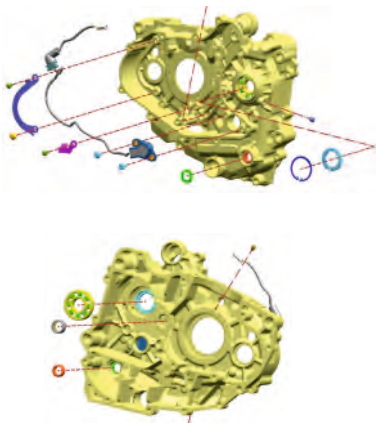

PLATE NO. : 12 BALANCER IDLER GEAR/WATER PUMP	PAGE NO. 23

Pictorial Index

PLATE NO. : 13 OIL PUMP	PAGE NO. 25

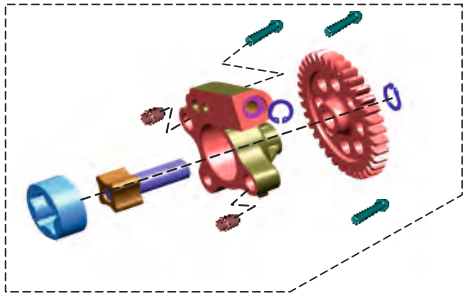

PLATE NO. : 14 RADIATOR	PAGE NO. 27

PLATE NO. : 15 COVER CLUTCH	PAGE NO. 29

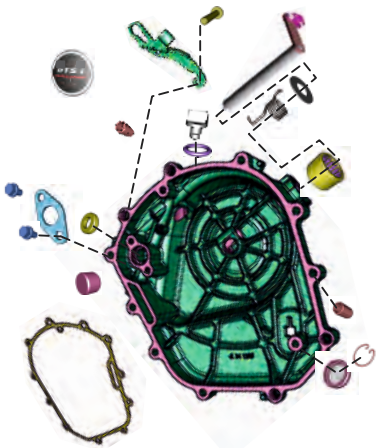

PLATE NO. : 16 COVER MAGNETO	PAGE NO. 31

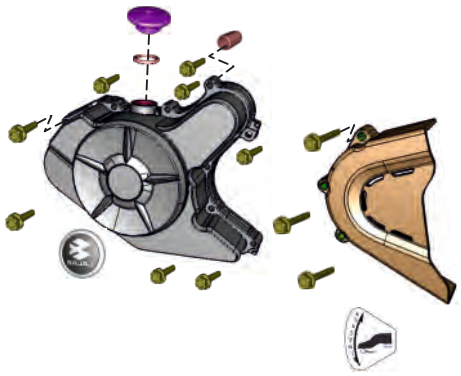

PLATE NO. : 17 CLUTCH ASSEMBLY	PAGE NO. 33

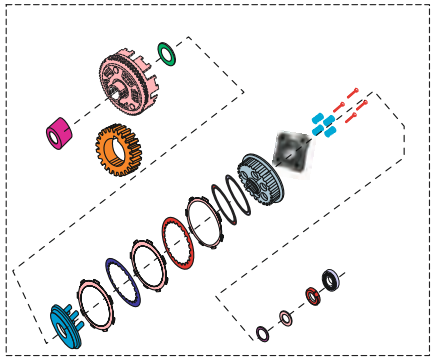

PLATE NO. : 18 CARBURETTOR	PAGE NO. 35

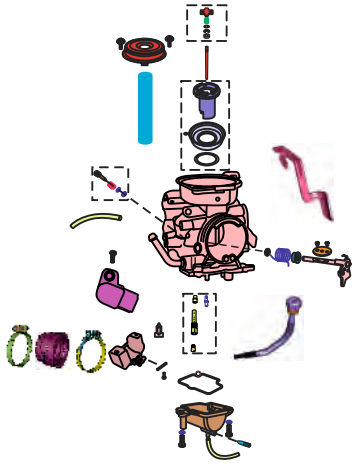

PLATE NO. : 19 AIR CLEANER COMPLETE	PAGE NO. 37

PLATE NO. : 20 SILENCER ASSEMBLY	PAGE NO. 39

Pictorial Index

PLATE NO. : 21 STARTER ASSEMBLY	PAGE NO. 41

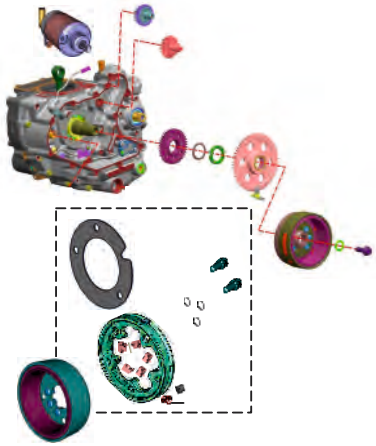

PLATE NO. : 22 MAGNETO, CDI & H.T. COIL	PAGE NO. 43

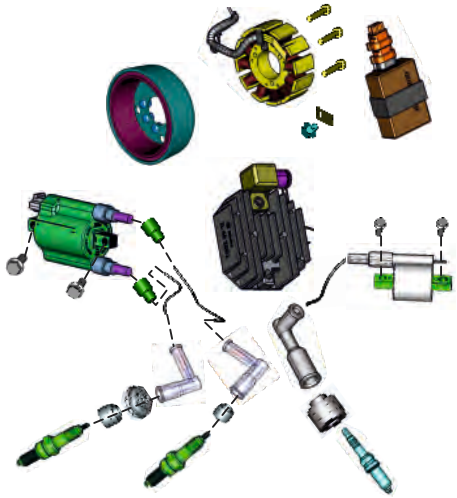

PLATE NO. : 23 SEAT ASSEMBLY / SEAT LOCK	PAGE NO. 45

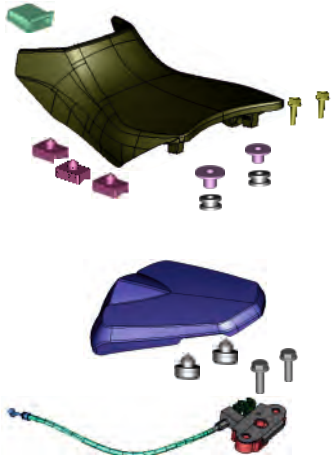

PLATE NO. : 24 ENGINE MOUNTINGS	PAGE NO. 47

PLATE NO. : 25 FRAME & FITTINGS	PAGE NO. 49

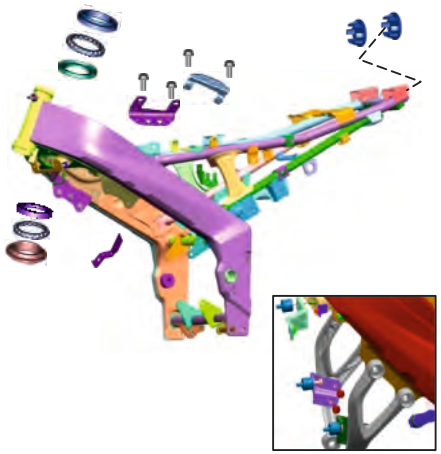

PLATE NO. : 26 SWING ARM/REAR SHOCK ABSORBER	PAGE NO. 51

PLATE NO. : 27 PILLION FOOT REST / HOLDER	PAGE NO. 53

PLATE NO. : 28 MUD GUARD - FRONT & REAR	PAGE NO. 55

Pictorial Index

PLATE NO. : 29 STAND ASSEMBLY	PAGE NO. 57

PLATE NO. : 30 TUBE / TYRE / RIM	PAGE NO. 59

PLATE NO. : 31 FRONT HUB	PAGE NO. 61

PLATE NO. : 32 FRONT MASTER CYLINDER	PAGE NO. 63

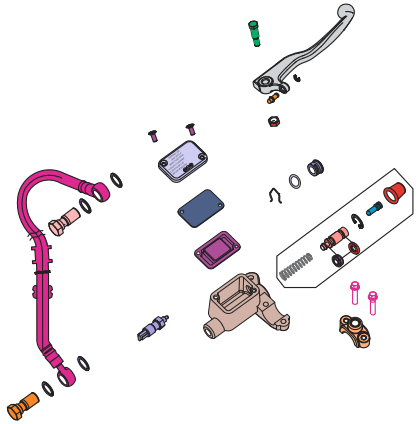

PLATE NO. : 33 FRONT DISC BRAKE	PAGE NO. 65

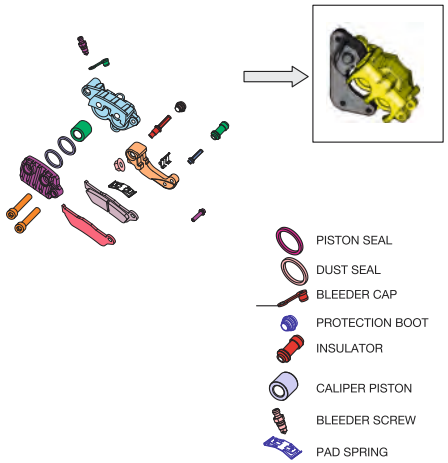

PLATE NO. : 34 REAR HUB	PAGE NO. 67

PLATE NO. : 35 REAR DISC BRAKE SYSTEM	PAGE NO. 69

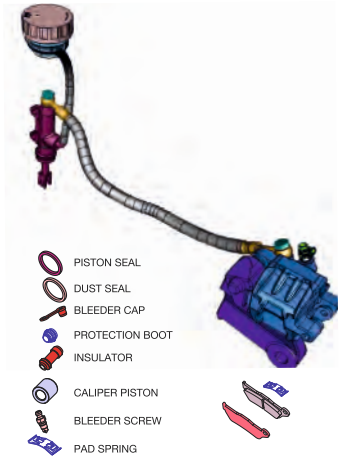

PLATE NO. : 36 REAR BRAKE PEDAL	PAGE NO. 71

Pictorial Index

PLATE NO. : 37 HANDLE BAR ASSEMBLY	PAGE NO. 73

PLATE NO. : 38 FRONT FORK	PAGE NO. 75, 77

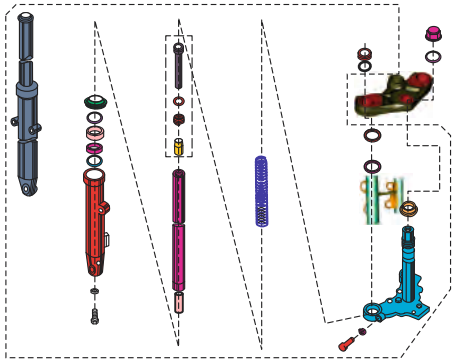

PLATE NO. : 39 PAINTED PARTS & DECALS	PAGE NO. 79, 81

PLATE NO. : 40 RADIATOR COVERS	PAGE NO. 83

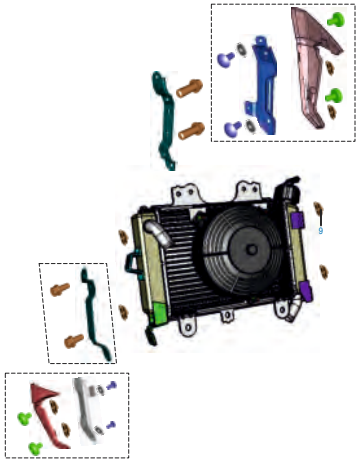

PLATE NO. : 41 PETROL TANK, CAP TANK & GAUGE FUEL	PAGE NO. 85

PLATE NO. : 42 FITTING PETROL TANK COVER, SIDE COVERS & SEAT COVER	PAGE NO. 87

PLATE NO. : 43 METER ASSEMBLY	PAGE NO. 89

PLATE NO. : 44 CONTROL CABLES	PAGE NO. 91

Pictorial Index

PLATE NO. : 45 CHAIN CASE	PAGE NO. 93

PLATE NO. : 46 HEAD LAMP & FAIRING	PAGE NO. 96

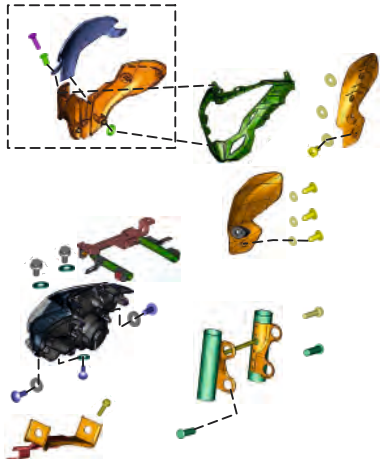

PLATE NO. : 47 INDICATOR LIGHT ASSEMBLY	PAGE NO. 97

PLATE NO. : 48 TAIL STOP ASSEMBLY / FRONT NUMBER PLATE	PAGE NO. 99

PLATE NO. : 49 ELECTRICAL EQUIPMENTS	PAGE NO. 101
PLATE NO. : 50 TOOL KIT	PAGE NO. 103
PLATE NO. : 51 ACCESSORIES / GRAB HANDLE	PAGE NO. 105

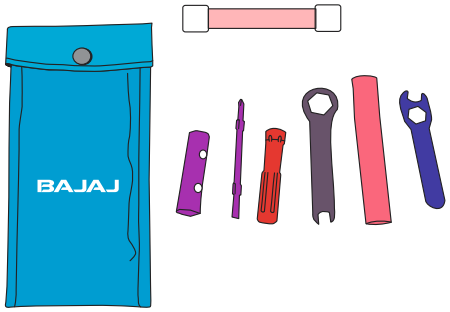

Pictorial Index

Plate No.: 1

Cover Cylinder Head

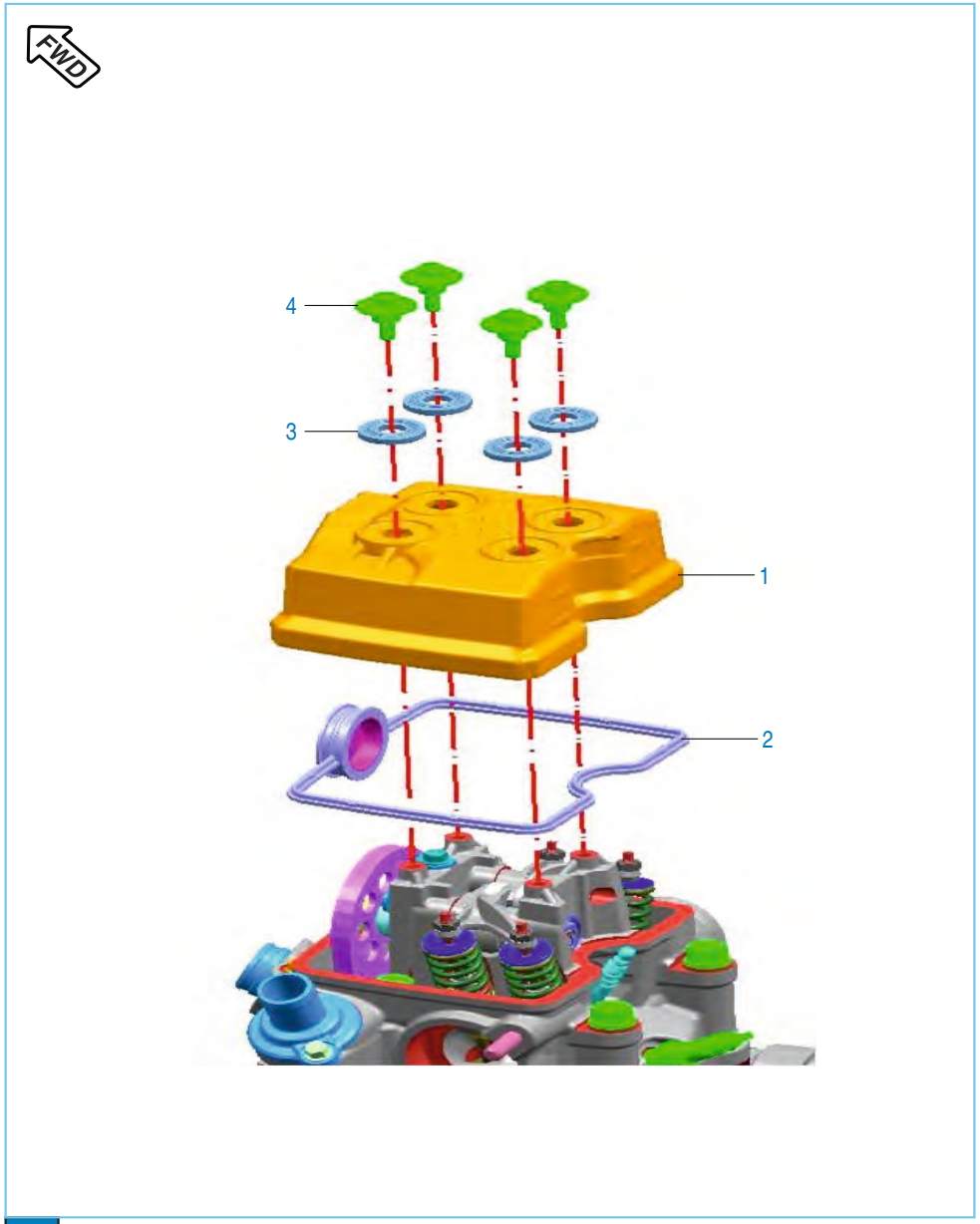

No.	Part No.	Description	Qty.	Remarks
1	JL 5110 02	Cover Cylinder Head	1	
2	JL 5110 01	Gasket Head Cover(Rubber)	1	
3	JG 5110 21	Washer	4	
4	JG 5110 22	Bolt Special	4	

FWD Front Wheel Direction

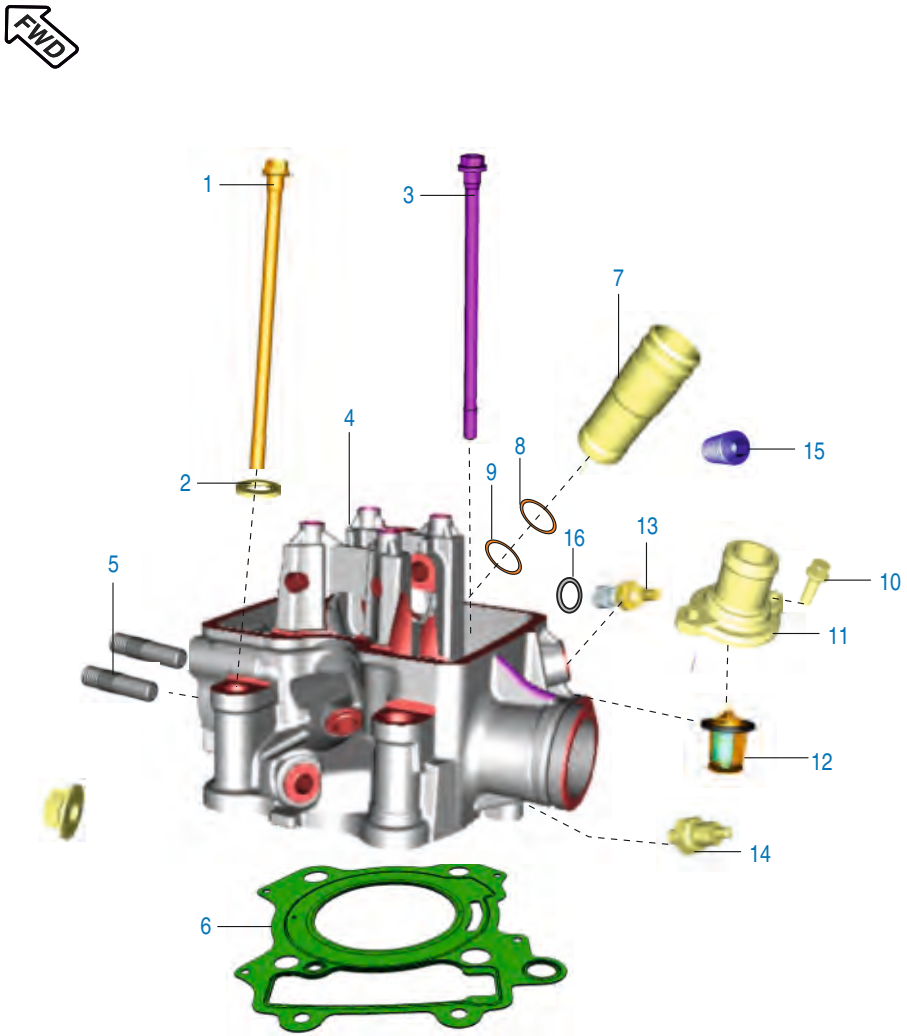

Front Wheel Direction

Plate No.: 2

Brand ID: 001MC629

Cylinder Head

No.	Part No.	Description	Qty.	Remarks
1	JG 5410 68	Hex Flange Head Bolt M10	4	
2	LD A000 08	Washer 11.2*20*2T	4	
3	JL 5110 09	M6 Stud Bolt	2	
4	36 JL00 10	Cylinder Head	1	
5	JG 5110 46	Stud (M8*1.25)	2	
6	JL 5110 22	Gasket Cylinder Head	1	
7	JL 5112 19	Sleeve Spark Plug	1	
8	39 2629 21	'O' Ring Sleeve	1	Top side
9	39 1283 21	'O' Ring Sleeve	1	Bottom side
10	39 1673 04	Bolt - Flange :- M6	2	
11	JL 5110 29	Cover Thermostat	1	
12	BF 6012 07	Thermostat Assembly	1	alt Jl 6012 24
	JL 6012 37	Thermostat Assembly	1	Alt for Jl 6012 24
13	JG 3514 00	Coolant Water Temp Sensor	1	
14	DK 1012 25	Switch Oil Pressure	1	
15	39 2608 01	Grub Screw	1	
16	39 2699 20	Ó'Ring	1	

Plate No.: 3

Brand ID: 001MC629

Valve

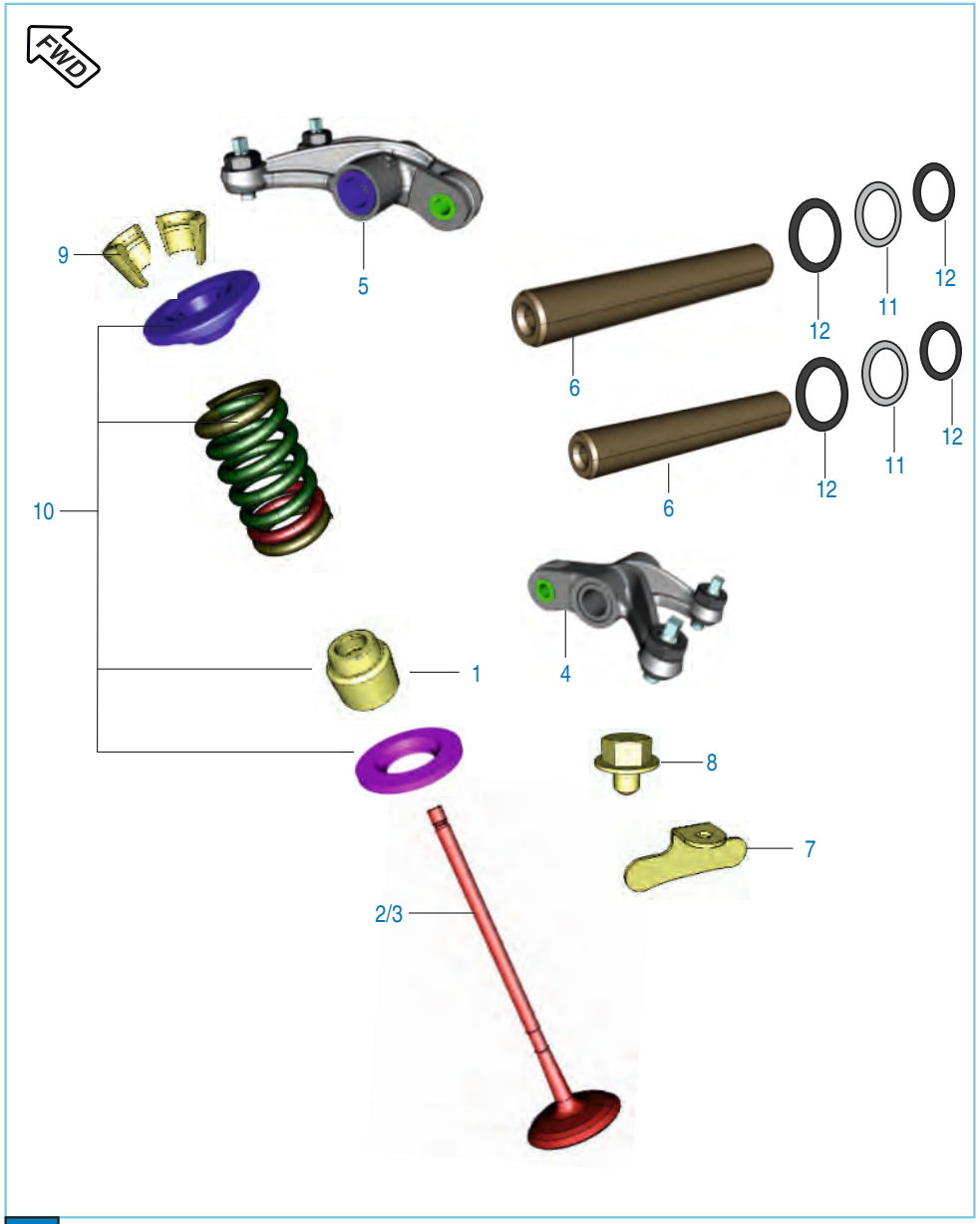

No.	Part No.	Description	Qty.	Remarks
1	39 2017 19	Seal - Oil	4	
2	JL 5110 10	Valve Intake	2	
3	JL 5110 11	Valve Exhaust	2	
4	JL 5110 06	Assembly Rocker Arm Intake	1	
5	JL 5110 07	Assembly Rocker Arm Exhaust	1	
6	JL 5112 05	Rocker Arm Shaft	1	
7	JF 5112 07	Plate Stopper Rocker Arm	1	
8	LA E000 16	Bolt Flanged M5X0.8X6L-Precoated 1		
9	DG 1010 29	Cotter Valve	8	
10	36 JL00 11	Valve Repair Kit	4	
11	DH 1012 95	Wave Washer	2	
12	39 2440 11	Plain Wahser	4	

FWD Front Wheel Direction

Plate No.: 4

Brand ID: 001MC629

Camshaft / Tensioner

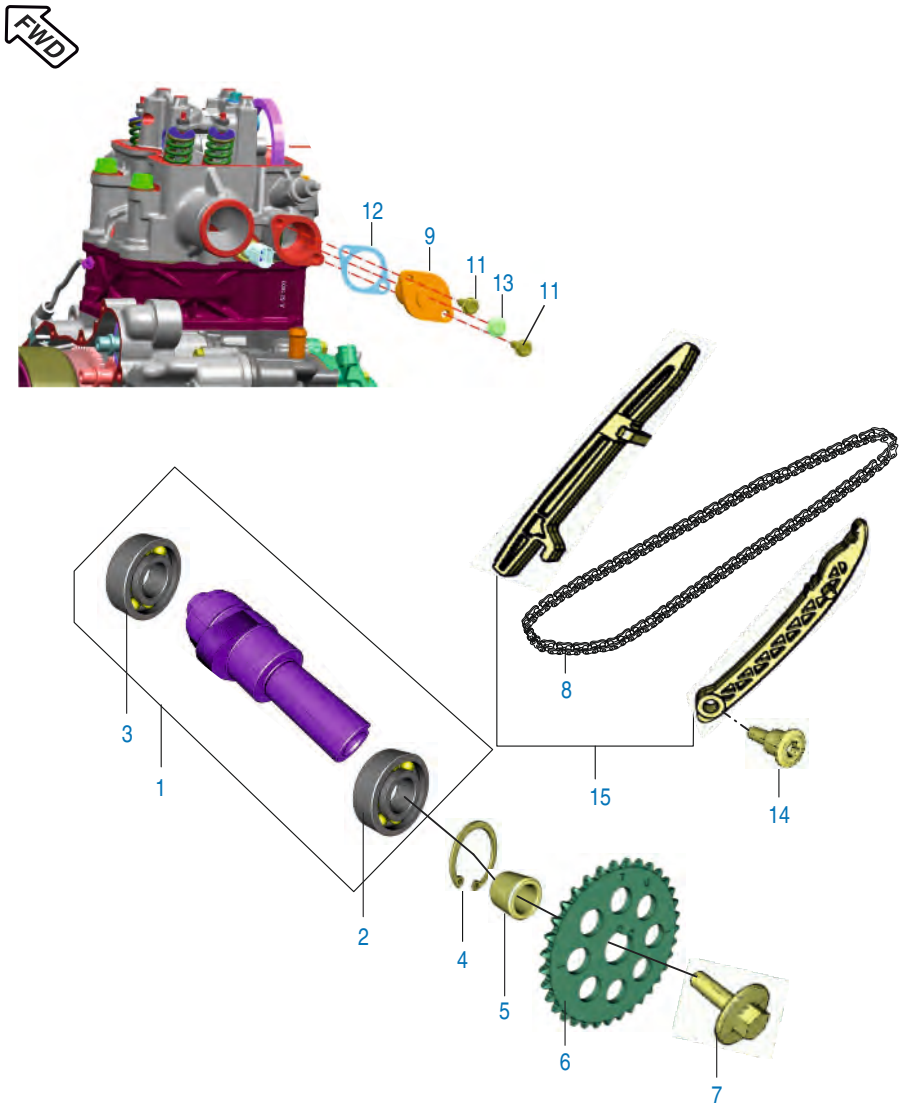

No.	Part No.	Description	Qty.	Remarks
1	JF 5112 28	Assembly Camshaft	1	
2	JG 5312 20	Bearing - Ball 6202/HN3	1	
3	AP 1012 36	Bearing - Ball :- 12 X 28 X 8	1	
4	LE B000 01	Circlip - Internal	1	
5	JL 5112 21	Spacer Camshaft	1	
6	JL 5112 20	Sprocket Camshaft	1	
7	DU 1012 25	Bolt Special Flanged (Camshaft)	1	
8	JL 5112 22	Timing Chain	1	
9	JC 1010 34	Tensioner Assembly	1	
10	39 2669 21	Ring - O (Tensioner Bolt)	1	N.I.
11	KA DQ06 20	Bolt Hexagonal	2	
12	CS 1011 28	Gasket	1	
13	JG 5112 70	Bolt Flanged M6X1X6L-Special	1	
14	DH 1013 92	Chain Guide Pivot Bolt	1	
15	36 JL00 01	Kit Cam Chain Guide	1	

FWD Front Wheel Direction

Plate No.: 5

Cylinder and Piston

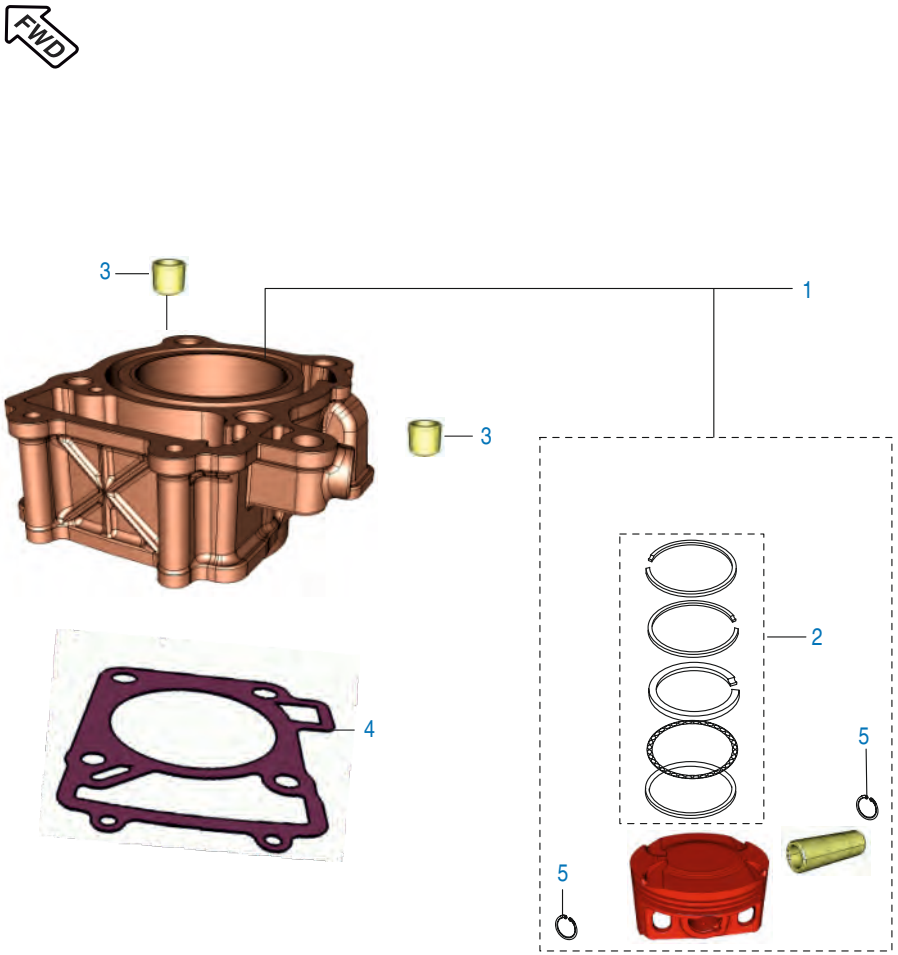

No.	Part No.	Description	Qty.	Remarks
1	36 JL00 07	Kit Asly Block Piston	1	
2	36 JU00 01	Kit Piston Ring	1	
3	39 2181 06	Pin - Hollow Dowel :- 14 X 20	2	
4	JL 5210 02	Gasket Cylinder Block	1	or
5	39 2132 17	Ring - Snap	2	

FWD Front Wheel Direction

Plate No.: 6

Brand ID: 001MC629

Crankshaft

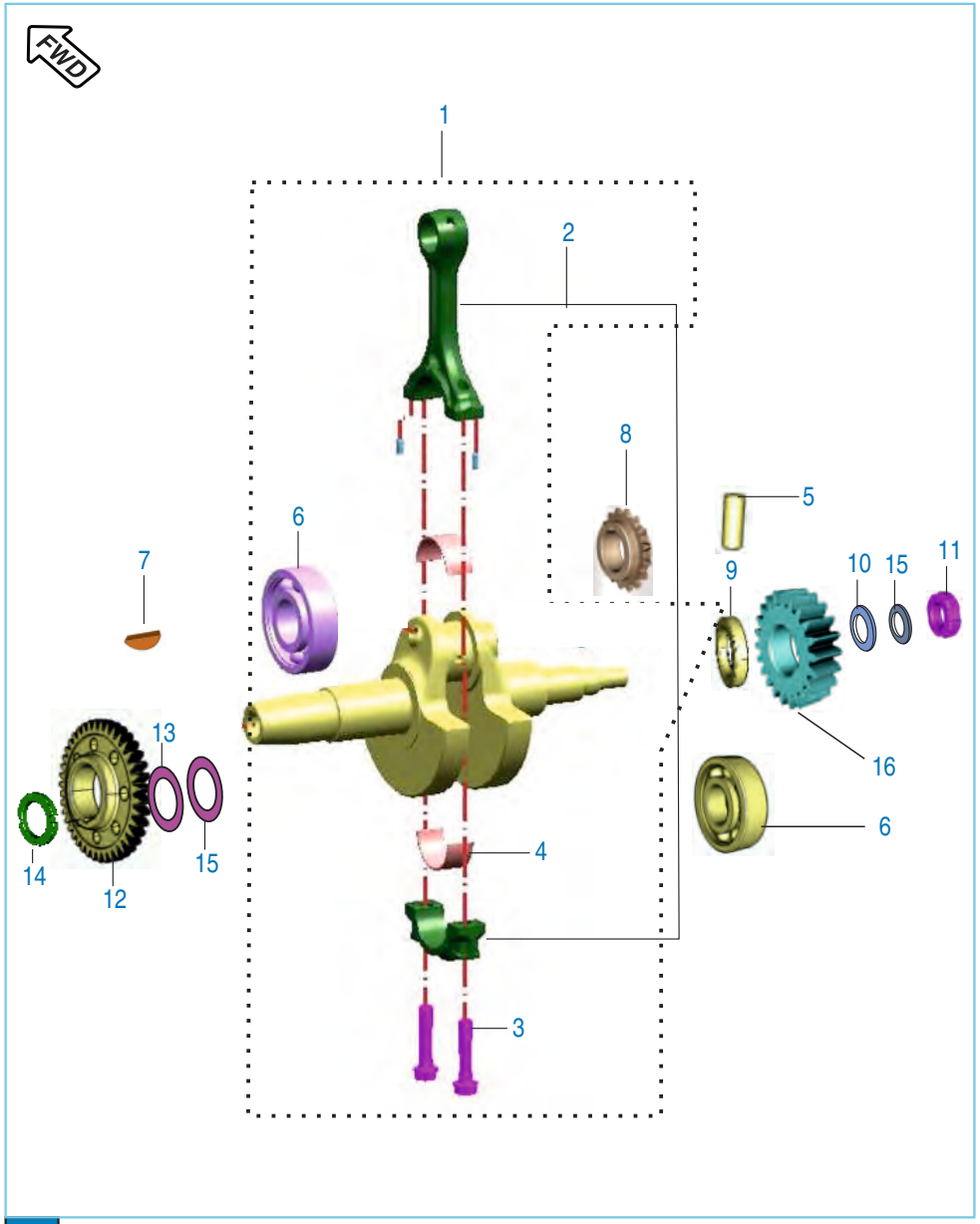

No.	Part No.	Description	Qty.	Remarks
1	JU 5310 27	Crankshaft Assembly Comp	1	
2	JF 5310 07	Conrod Assly Compl	1	
3	JF 5310 14	Bolt (Jf Con Rod)	2	
4	JU 5310 21	Bush Big End	2	
5	39 2203 07	Pin - Parallel	2	
6	39 1931 20	Bearing - Ball : 28 X 68 X 18	2	
7	31 1011 73	Key-Woodruff for Crankshaft Cl. Side	3	
8	JF 5112 25	Sprocket Crankshaft	1	N.S
	JG 5310 27	Sprocket Crankshaft	1	Alternate for JF 5112 25
9	JG 5310 31	Spacer Crankshaft	1	
10	39 2200 11	Washer - Plain (Primary Drive Gear)1		
11	LC D000 01	Nut Sprocket Drive Lock	1	
12	JG 5310 41	Balancer Drive Gear	1	
13	LD H000 02	Beleville Washer	1	
14	JG 5310 40	Nut Balancer Drive Lock	1	
15	LD B000 10	Washer - Plain	2	
16	JG 5512 16	Gear Drive	1	

FWD Front Wheel Direction

Plate No.: 7

Brand ID: 001MC629

Transmission

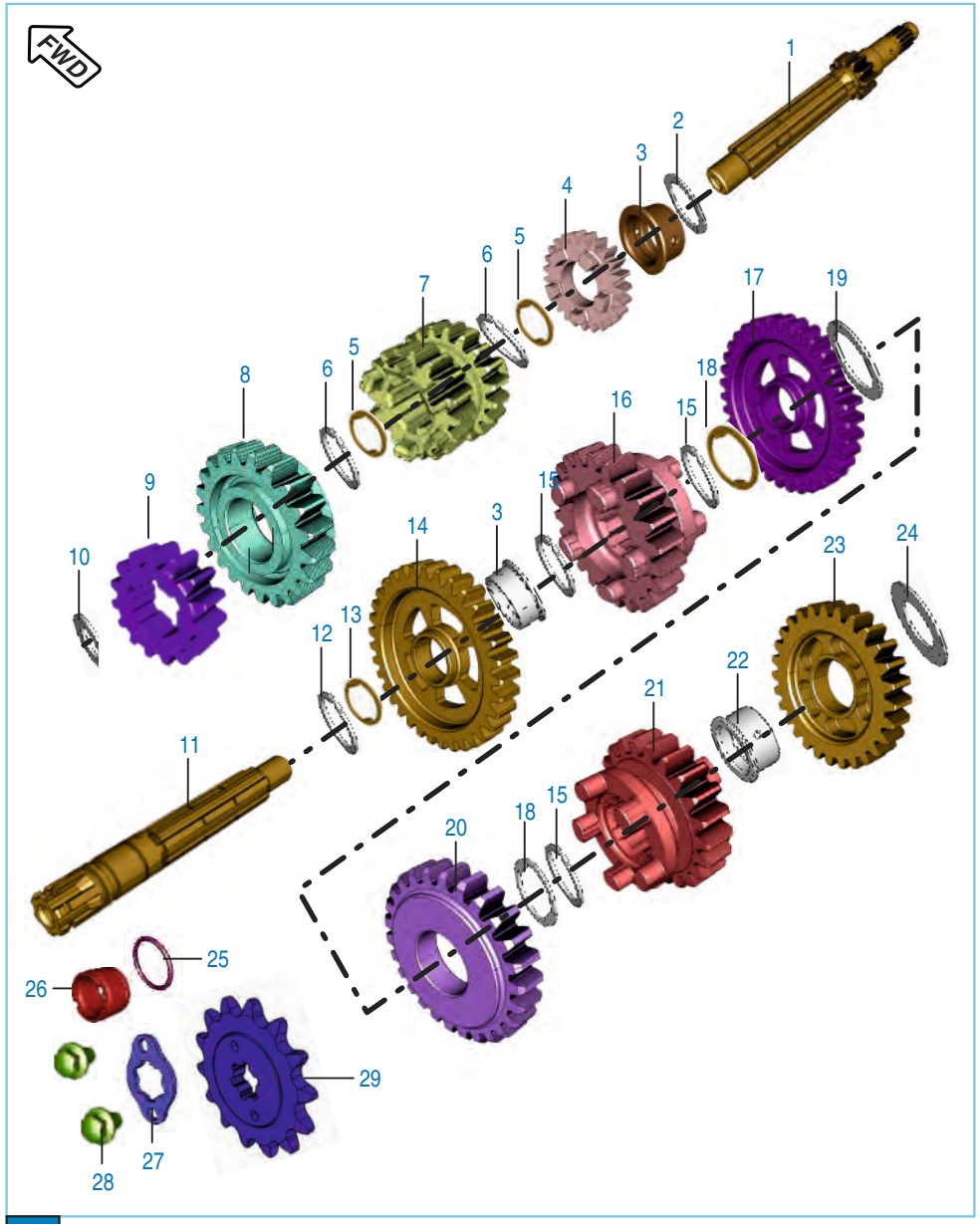

No.	Part No.	Description	Qty.	Remarks
1	JG 5510 27	Shaft Input T/M Comp	1	
2	39 2158 11	Washer - Plain	1	
3	JG 5510 13	Bush 6th Drive / Bush 2nd Driven	1	
4	JG 5512 13	Gear 6th Drive	1	
5	JG 5510 20	Washer Splined	2	
6	BF 5510 37	Ring - Snap	2	
7	JG 5512 14	Gear Drive Multiple 3&4	1	
8	JG 5512 20	Gear 5th Drive	1	
9	JG 5512 27	Gear 2nd Drive	1	
10	JG 5510 22	Washer - Plain	1	
11	JG 5510 25	Output Shaft Assy With Plug	1	
12	DH 1012 35	Circlip	1	
13	39 2166 11	Washer Special	1	
14	JG 5512 28	Gear 2nd Driven	1	
15	BF 5510 37	Ring - Snap	3	
16	JG 5512 22	Gear 5th Driven	1	
17	JG 5512 23	Gear 3rd Driven	1	
18	JG 5510 22	Spline Thrust Washer	2	
19	JG 5510 21	Lock Washer Splined Thrust	1	
20	JG 5512 15	Gear 4th Driven	1	
21	JG 5512 24	Gear 6th Driven	1	
22	JG 5510 00	Bush 1st Driven	1	
23	JG 5512 25	Gear 1st Driven	1	
24	JG 5510 21	Washer - Plain	1	
25	DK 1013 52	O-Ring Sprocket Collar(17.5*1.5)	1	
26	JG 5510 10	Collar Sprocket	1	
27	JG 5510 19	Plate Drive Sprocket	1	
28	LA E000 17	Bolt Flanged M6X1X10L-Precoated	2	
29	DV 1010 48	Sprocket Output (14T)	1	

FWD Front Wheel Direction

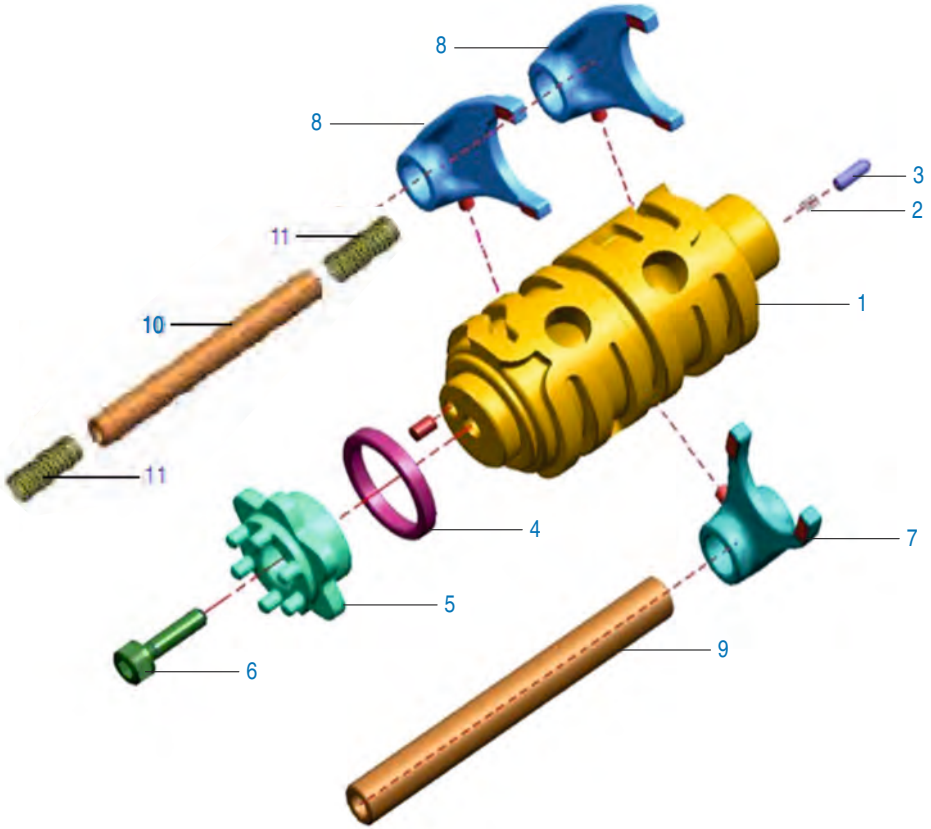

Front Wheel Direction

Plate No.: 8

Brand ID: 001MC629

Change Drum / Shift Fork

No.	Part No.	Description	Qty.	Remarks
1	JG 5610 11	Drum Complete Gear Shift	1	
2	EC 5610 23	Spring Gear Switch Indicator	1	
3	39 2606 07	Pin - Parallel	1	
4	JG 5610 10	Spacer-Guide Gear Shift	1	
5	JG 5612 22	Guide Gear Shift	1	
6	LA C000 24	Bolt Socket Head M6X1X20L	1	
7	JG 5610 12	Fork Gear Shift Input	1	
8	JG 5610 13	Fork Gear Shift Output	2	
9	JG 5610 16	Shaft Gear Shift Fork	1	
10	JG 5612 25	Shaft Gear Shift Fork Output	1	
11	JG 5612 15	Compression Spring	2	

Plate No.: 9

Brand ID: 001MC629

Gear Change Mechanism

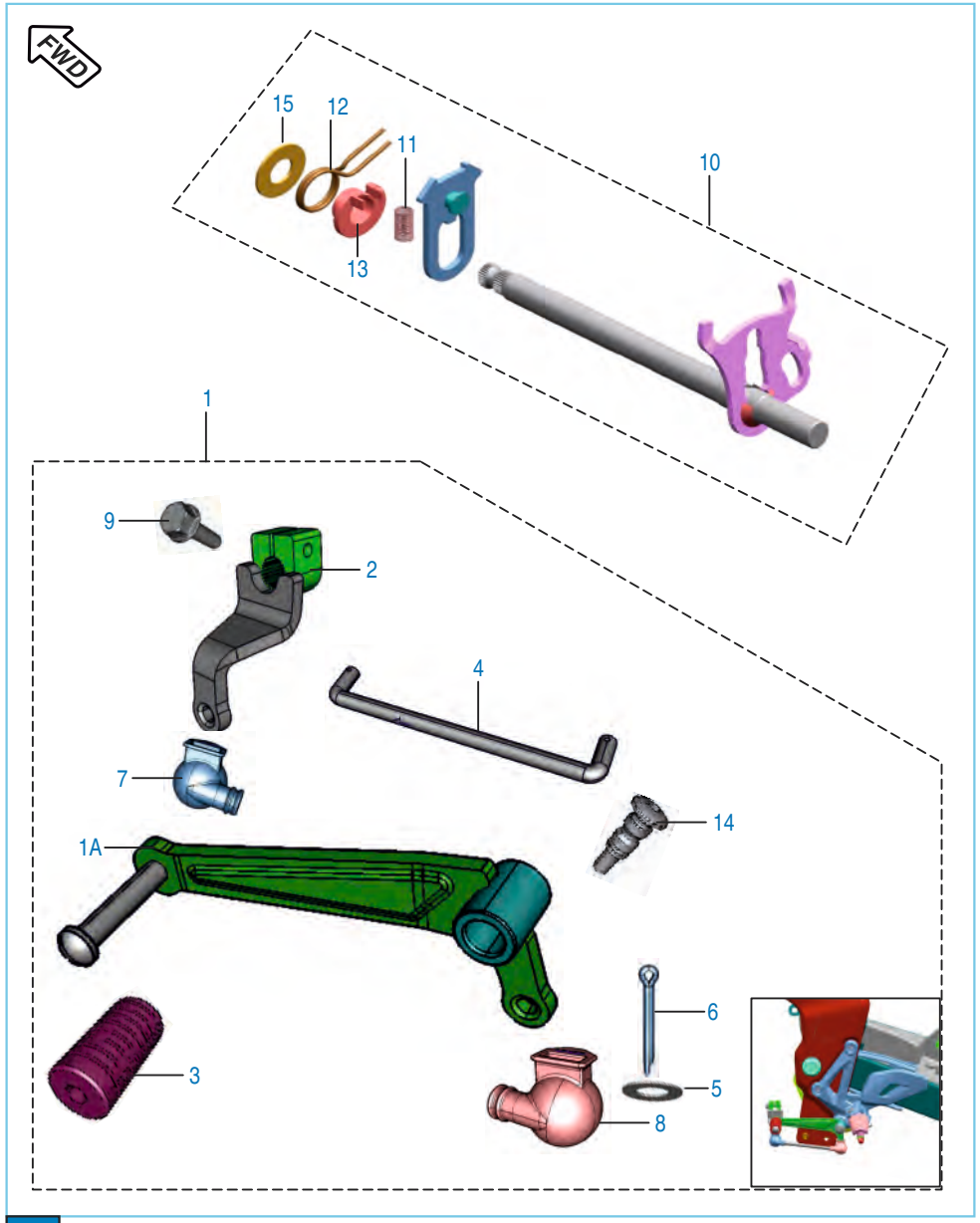

No.	Part No.	Description	Qty.	Remarks
1	JL 5614 00	Assembly Lever Complete Change 1		
1A	JL 5614 01	Lever Complete Change	1	
2	JL 5614 04	Assembly Lever Change Arm	1	
3	DH 1015 09	Damper	1	
4	JL 5614 05	Rod Tie	1	
5	JD 5614 16	Washer - Nylon (Dia6.5Xd15X2.0)	2	
6	39 0808 08	Pin - Split	2	
7	JL 5614 07	Boot -Change Arm	1	
8	JL 5614 08	Boot -Change Lever	1	
9	39 1902 04	Bolt - Flange :- M6	1	
10	JG 5612 00	Lever Gear Shift Assy Comp.	1	
11	JG 5612 15	Compression Spring	1	
12	JG 5612 18	Torsion Spring	1	
13	JG 5612 17	Bush-Torsion Spring	1	
14	JL 5614 09	Bolt Gear Change Lever	1	
15	JL 5614 10	Washer - Steel	1	

FWD Front Wheel Direction

Plate No.: 10

Brand ID: 001MC629

Engine Assembly / Crankcase RH

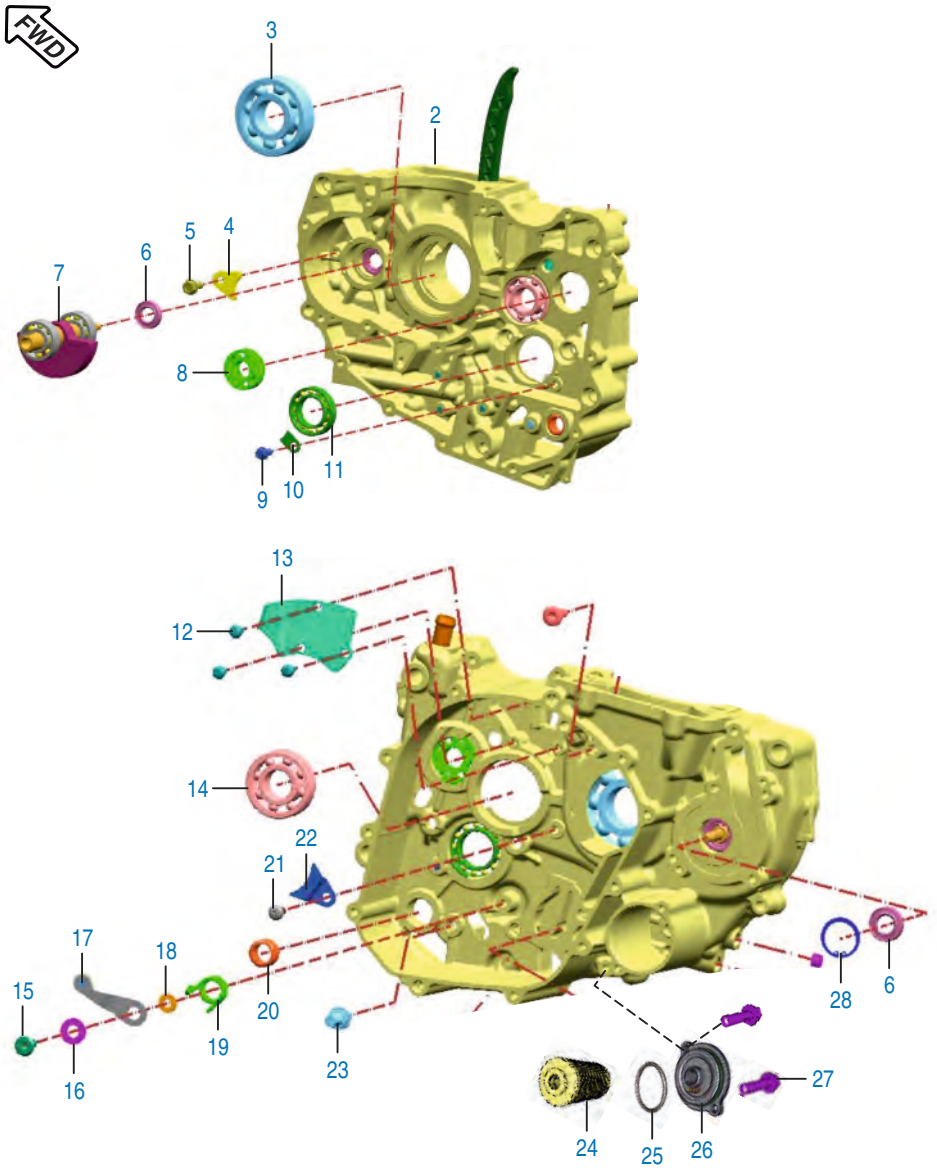

No.	Part No.	Description	Qty.	Remarks
1	JL 5010 03	Assembly Engine 200	1	N.I.
2	36 JL00 04	Kit Asly Crankcase RH	1	
3	39 1931 20	Ball Bearing 28 X 68 X 18	1	
5	LA D000 77	Bolt Flanged M6x16	1	
4	JG 5410 46	Balancer Bearing Stopper	1	
6	JG 6010 07	Special Shaft Seal Ring (oil)	2	
7	JU 5312 13	Balancer Assly.	1	N.S
8	39 2602 20	Bearing - Ball 6202/HN3	1	
9	DH 1013 83	Precoated Flanged Bolt M6	1	
10	JG 5410 59	Plate Stopper Bearing Drum	1	
11	39 2601 20	Bearing - Ball :- 61905 (25 X 42 X 9)	1	
12	LB B000 06	Screw Pan head	3	
13	JU 5410 05	Breather Plate	1	
14	59 2000 28	Bearing Ball RH	1	
15	JG 5612 04	Bolt Drum Stopper	1	
16	JG 5612 05	Washer	1	
17	JG 5610 09	Stopper Drum Complete	1	
18	39 2005 11	Washer	1	
19	JG 5612 26	Spring	1	
20	39 2562 20	Bearing - Needle Roller :- 13X19X12	1	
21	39 0746 01	Screw Pan Cross - M6	1	
22	JG 5410 45	Input Shaft Bearing Stopper	1	
23	DP 1011 91	Bolt Shifter	1	
24	JG 5710 14	Oil Filter	1	
25	JG 5710 16	O-Ring	1	
26	JL 5412 21	Cap Oil Filter	1	
	JE 5412 18	Cap Oil Filter (MAGD3)	1	Ref. Cir. IB-82
27	KA DP05 16	Hexagonal Flange Bolt	2	
28	LE B000 01	Circlip Internal	1	

FWD Front Wheel Direction

Plate No.: 11

Brand ID: 001MC629

Crankcase LH

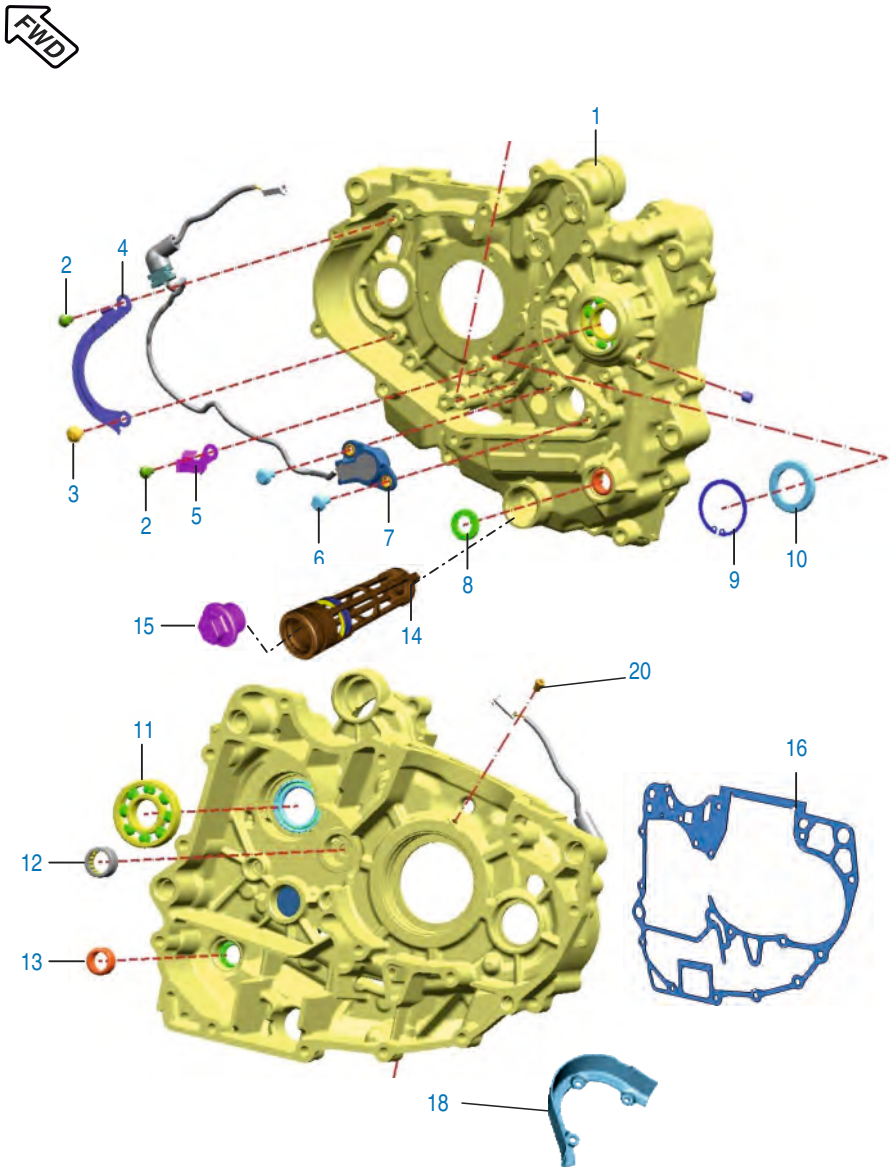

No.	Part No.	Description	Qty.	Remarks
1	36 JL00 03	Kit Assly. Crankcase LH	1	
2	LA E000 14	Bolt Flanged	2	
3	DH 1013 81	Pre Coated pan Screw	1	
4	JG 5410 63	Bracket Harness Upper	1	
5	JG 5410 44	Bracket Harness Lower	1	
6	39 1773 04	Bolt M-5 x 16	2	
7	JL 3518 00	Neutral Indicator Switch	1	
8	39 1043 19	Seal Oil	1	Gear Change lever
9	KE BA37 15	Circlip Internal	1	Output Shaft
10	DG 1014 56	Seal Oil	1	Output Shaft
11	59 2000 06	Bearing Ball	1	Output Shaft
12	JG 5410 15	Needle Bearing	1	Drum
13	39 2562 20	Needle Bearing	1	
14	JG 5710 24	Mesh Oil Filter Assly.	1	
14a	LJ A000 04	'O' ring Strainer	1	N.I.
15	JA 5410 48	Strainer Cap with 'O' Ring	1	
16	JG 5410 41	Gasket Crankcase	1	
17	36 JL00 14	Kit Engine Gasket	1	N.I.
18	JG 5410 58	Chain Guard	1	
19	KB BG06 12	Pan Screw Head	3	N.I.
20	JG 5410 74	Oil Nozzle	1	N.I.
21	KA EQ06 40	Bolt Flange	10	
22	LA D000 81	Bolt Flange Pre coated	4	
23	39 2181 06	Hollow Pin Dowel	4	N.I

FWD Front Wheel Direction

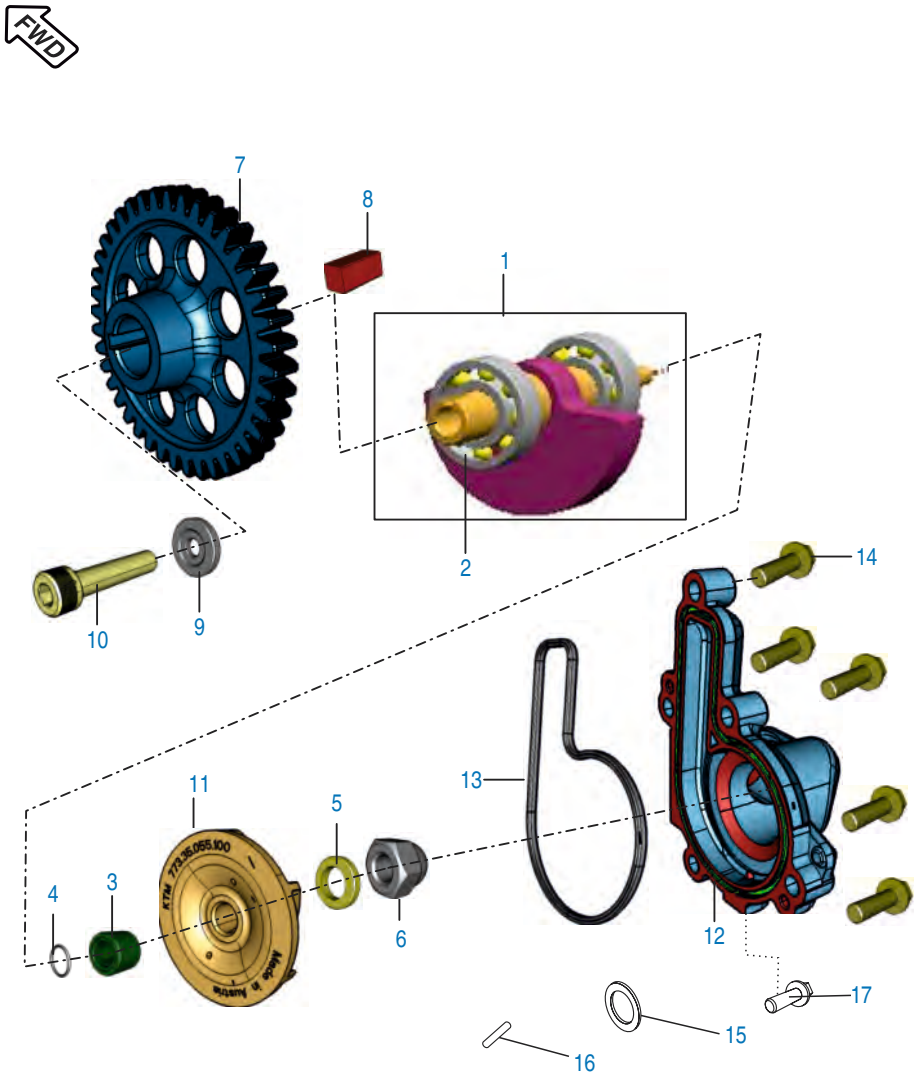

Front Wheel Direction

Plate No.: 12

Brand ID: 001MC629

Balancer Idler Gear / Water Pump

No.	Part No.	Description	Qty.	Remarks
1	JU 5312 13	Balancer Assy	1	N.S
2	59 2000 36	Balancer Bearing (6203/HN3C3D8)	2	
3	JG 5312 11	Sleeve Balancer Driven	1	
	JG 5312 28	Sleeve Balancer Driven	1	w.e.f. Apr. 2013
4	JG 5312 12	O Ring Balancer Driven	1	
	JG 5312 29	O Ring Balancer Driven	1	w.e.f. Apr. 2013
5	JG 5312 15	Washer (2.5MM)	1	
6	JG 6010 05	Dome Nut	1	
7	JG 5312 07	Gear Balancer Driven	1	
8	DS 1011 54	Key	1	
9	DH 1010 48	Washer - Special :- Camshaft	1	
10	DK 1013 86	Pre-coated Soc Hd Cap Bolt M8X401		
11	JG 6010 13	Water Pump Rotor	1	
12	JL 6010 05	Cover Water Pump	1	
13	JG 6010 12	O-Ring (Water Pump Cover)	1	
14	KA EQ06 20	Bolt Hexagonal	5	
15	39 1665 11	Washer - Seal :- 6	1	
16	39 2606 07	Pin - Parallel	2	
17	KA DQ06 06	Hex Bolt Flange Pre-coated	1	

Plate No.: 13

Oil Pump

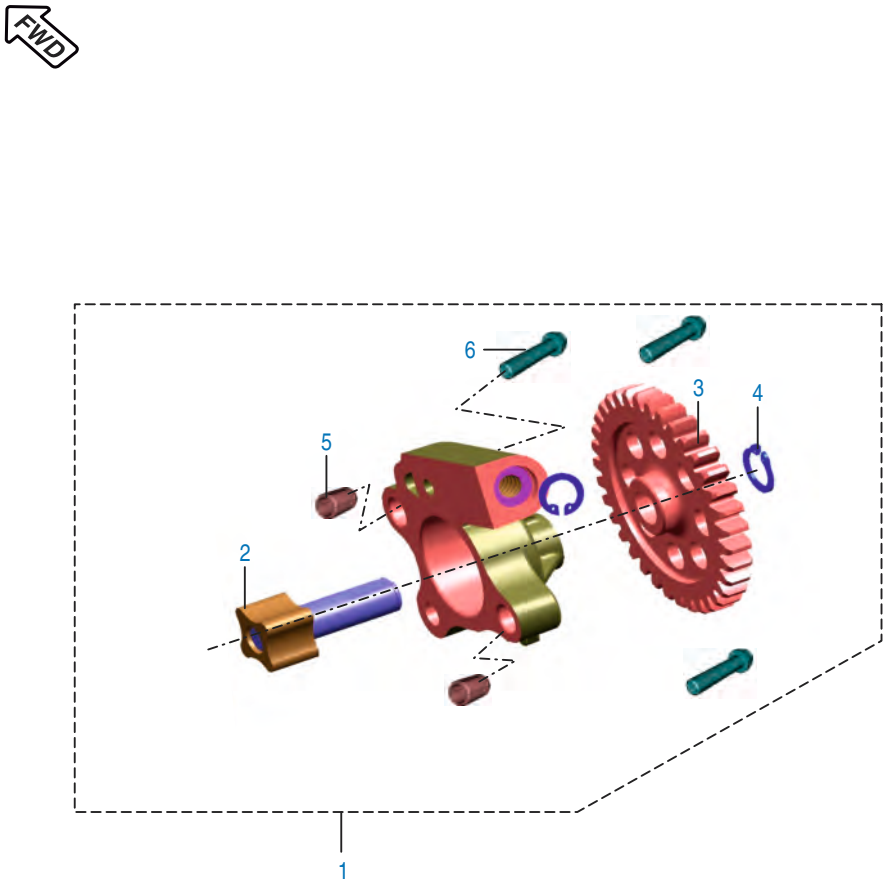

No.	Part No.	Description	Qty.	Remarks
1	JU 5710 00	Oil Pump Assy Comp	1	
2	JG 5710 22	Rotor Oil pump Inner With Shaft	1	N.S.
3	JG 5710 18	Gear Oil Pump Drive	1	
4	KE Ab10 10	Circlip	1	
5	39 0999 06	Pin - Hollow Dowel	2	
6	LA E000 18	Bolt Flanged M6X1X30L-Precoated	3	

FWD Front Wheel Direction

Plate No.: 14

Brand ID: 001MC629

Radiator

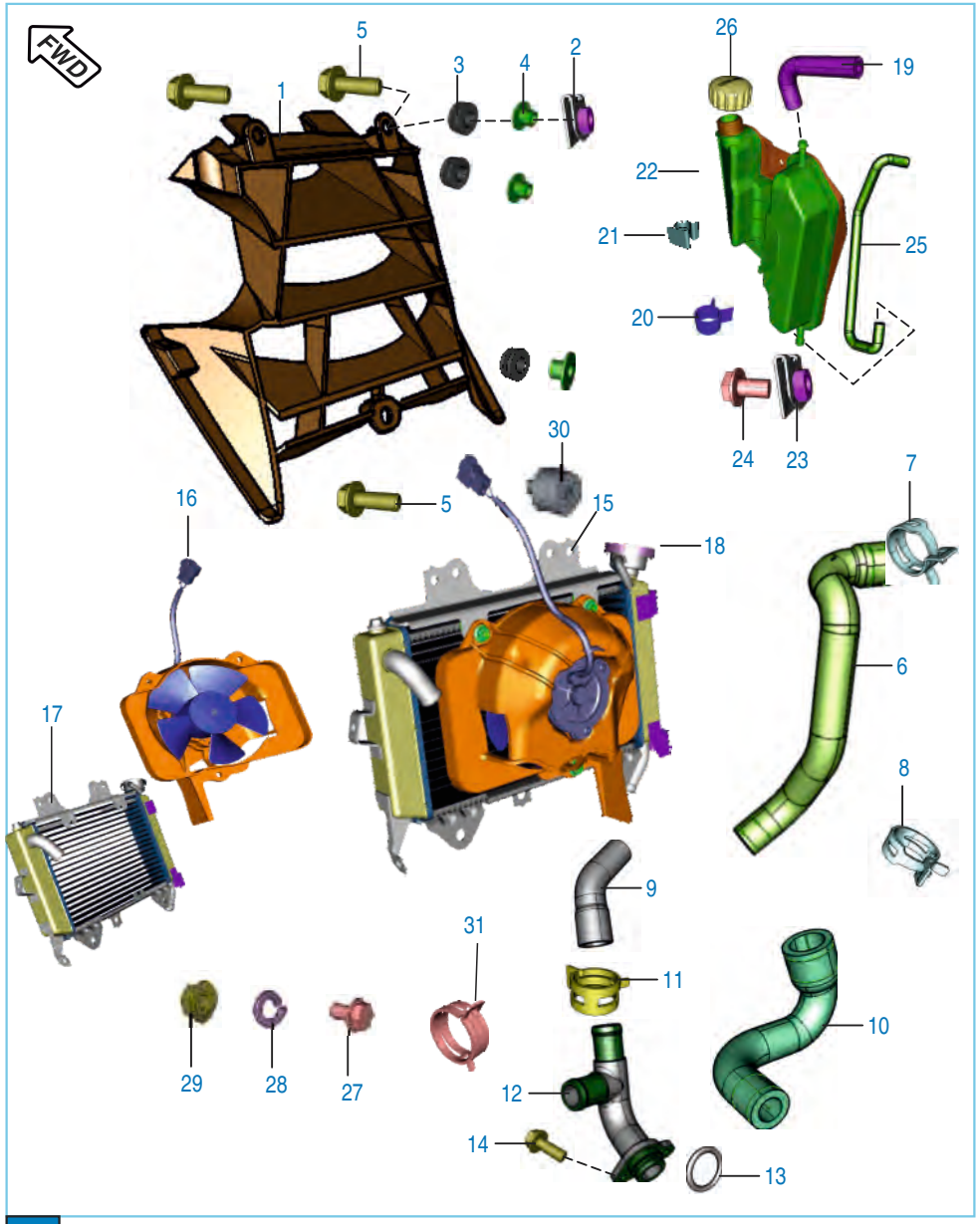

No.	Part No.	Description	Qty.	Remarks
1	JL 6012 10	Cowl Radiator	1	
2	DJ 1810 65	Nut - Clip :- M6	3	
3	JL 1812 56	Grommet For Radiator Cowl	3	
4	JW 1710 15	Collar Spoiler Central	3	
	JL 6012 31	Sleeve Cowl Mounting	3	from chs. no. MD2A36FZ0DCA80845
5	KA DA06 16	Bolt-Flange Dia-06 L-12	3	
6	JL 6010 00	Hose Thermostat To Radiator	1	
7	JG 6012 10	Clamp Radiator Pipe	1	
8	JG 6012 09	Clamp Radiator Pipe Dia 19.8	2	
9	JL 6012 20	Coolant Hose Radiator To T	1	
10	JL 6012 19	Hose By Pass To Pump	1	
11	JL 6012 12	Clamp Radiator Dia 19	1	
12	JL 6012 28	Coolant Pipe T Assembly	1	
	JL 6012 28	Coolant Pipe T Assembly	1	Ref. Cir. IB-82
13	JG 6012 21	O-Ring Coolant Pipe	1	
14	39 2204 04	Bolt - Hexagon Head With Flange:M6 2		
15	JL 6012 38	Radiator	1	
16	JY 6012 35	Radiator Fan	1	
17	JL 6012 34	Radiator Core	1	
18	JG 6012 29	Pressure Cap Radiator	1	
	JG 6012 35	Pressure Cap Radiator (Metallic)	1	Ref. Cir. IB-49
19	JG 6012 11	Cap Expansion Tank	1	
20	JL 6012 15	Clamp -Expansion Tank	2	
21	JG 1710 29	Spring Band Clip 10 Mm	3	
22	JL 6012 09	Tank Expansion	1	Before May 2014
	JL 6012 35	Expansion Tank Assy	1	For ch. No. MD2A36FZ7ECB5523 Ref. Cir. IB-124
	JL 6012 26	Tank Expansion		
23	DJ 1810 65	Nut - Clip :- M6	2	
24	39 1944 04	Bolt - Flanged	2	
25	JL 6012 13	Hose -Expansion Tank	1	
26	JG 6012 13	Hose -Expansion Tank Top	1	
27	39 1551 04	Bolt Flange	1	
28	39 0732 12	Washer Spring	4	
29	39 2711 15	Nut Flange M6 x 1P	4	
30	JG 5810 14	silent Block	4	
31	JL 6012 21	Clamp Coolant Pipe	1	

FWD Front Wheel Direction

Plate No.: 15

Brand ID: 001MC629

Cover Clutch

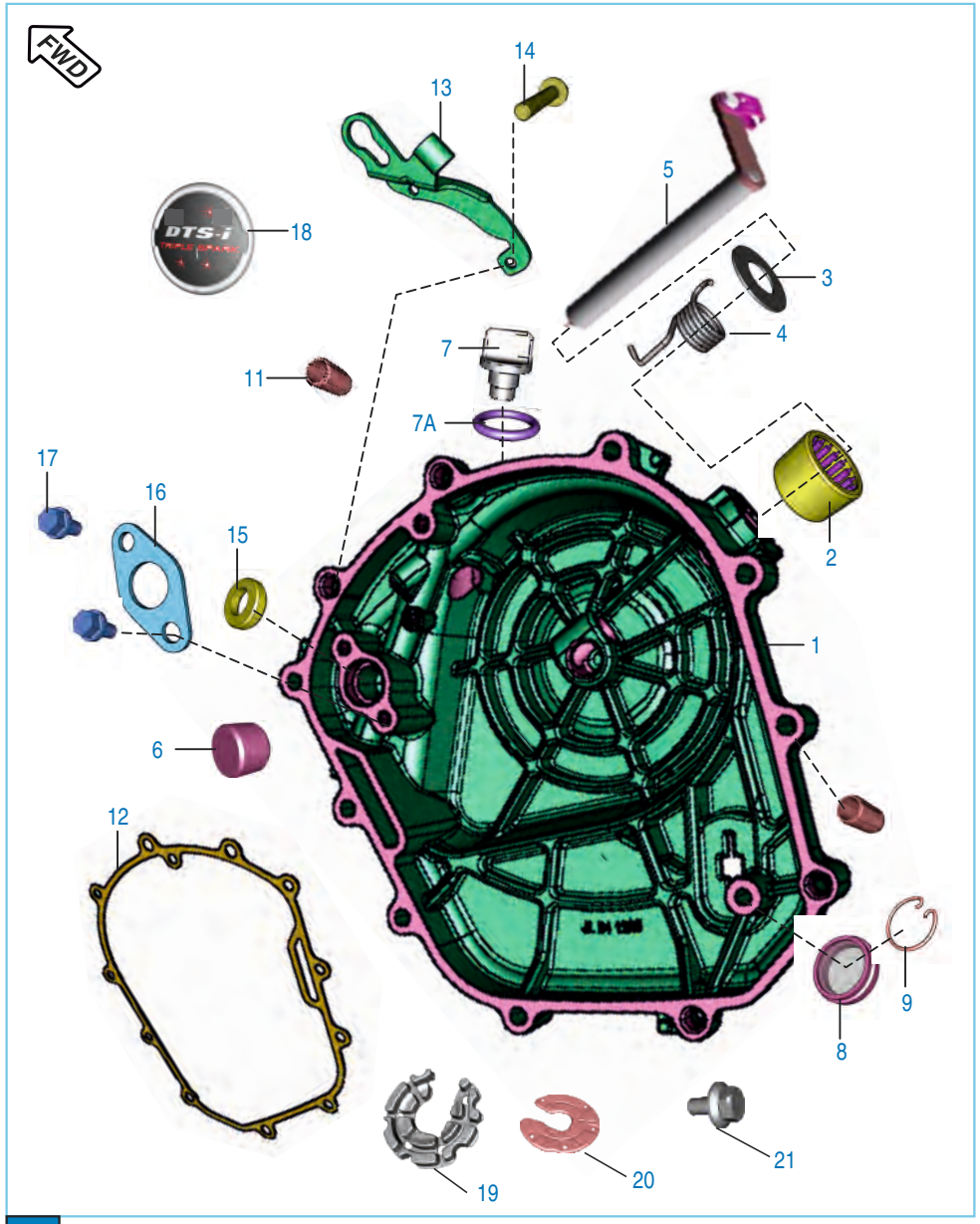

No.	Part No.	Description	Qty.	Remarks
1	52 JL00 73	Kit Asly Clutch Cover	1	With Nozzle, NRB, Jet
	52 JL01 43	Clutch Cover Assly (Semi Finished MAGD3)	1	Ref. Cir. IB-82
2	39 1990 20	Bearing - Needle	1	
3	LD B000 20	Washer 12.5X24X0.8T	1	
4	JG 5510 17	Spring	1	
5	JG 5510 15	Shaft Clutch Release Assy	1	
6	JU 5514 01	Rod Push	1	
7	JG 5412 30	Cap Oil Filling	1	
7A	39 1537 21	Ring 'O'	1	
8	DG 1014 18	Gauge	1	
9	DH 1021 17	Clip - Wire	1	
10	39 1041 19	Seal - Oil	1	N.I.
11	39 0999 06	Pin - Hollow Dowel	2	
12	JL 5412 07	Gasket Clutch Cover	1	
13	JL 5412 10	Bracket Clutch Cable	1	
14	KA EQ06 30	Bolt Flanged	11	
15	39 1046 19	Seal - Oil	1	
16	JG 5412 31	Plate -position	1	
17	DH 1013 83	Bolt M6	2	
18	JL 5412 22	Decal Triple Spark	1	
19	JL 5412 30	Damper Clutch Cover	1	
20	JL 5412 31	Plate Damper Clutch Cover	1	
21	DH 1013 88	Bolt M5 X 10	5	
22	JL 5412 18	Jet	1	

FWD Front Wheel Direction

Plate No.: 16

Brand ID: 001MC629

Cover Magneto

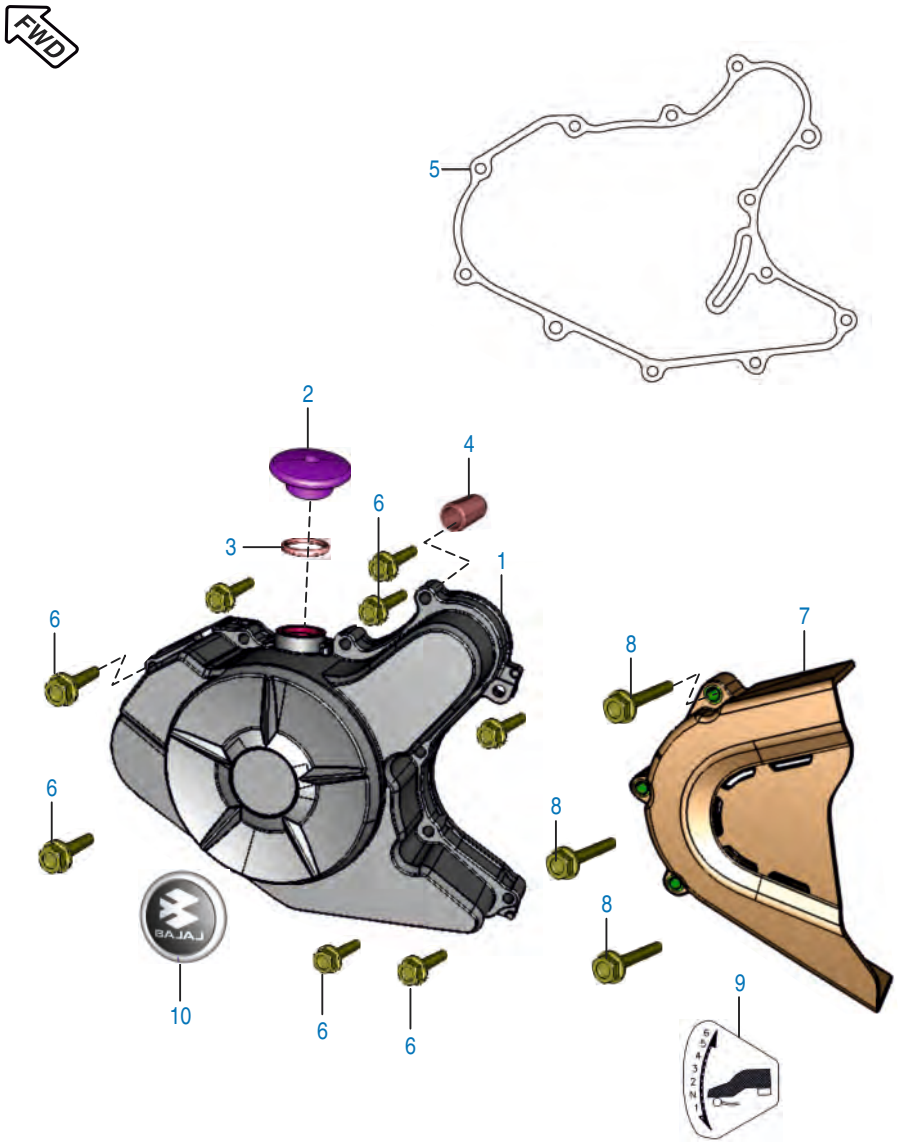

No.	Part No.	Description	Qty.	Remarks
1	JL 5412 42	Cover Magneto	1	
	52 JL02 07	Cover Magneto (Semi Finished MAGD3)	1	Ref. Cir. IB-32
2	JA 5412 33	Cap TDC Finder	1	
3	30 1011 95	Ring - O	1	
4	39 0999 06	Pin - Hollow Dowel	2	
5	JL 5412 08	Gasket Magneto Cover	1	
6	KA EQ06 30	Bolt Flanged	9	
7	JL 5412 03	Cover LH RR	1	
8	KA EQ06 45	Hex Headed Bolt Flange	3	
9	JL 2330 15	Gear Shift Label-6 Speed	1	
10	JL 5412 38	Decal 'Bajaj logo'	1	

FWD Front Wheel Direction

Plate No.: 17

Clutch Assly

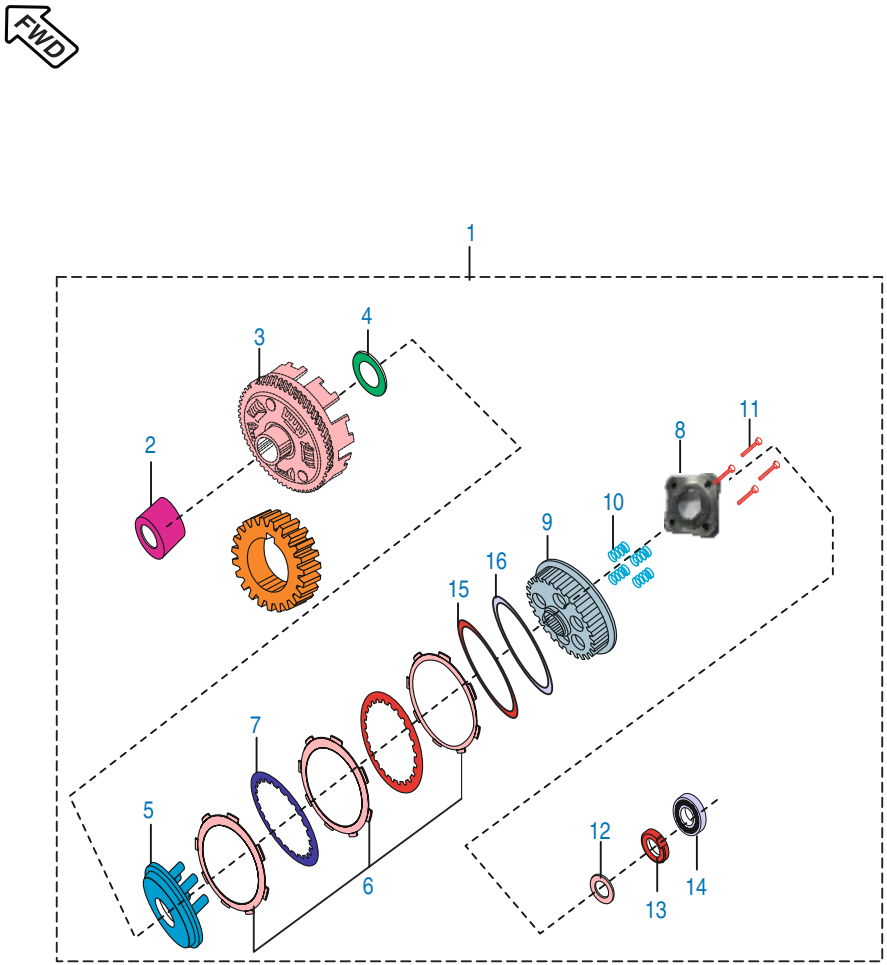

No.	Part No.	Description	Qty.	Remarks
1	JU 5514 04	Clutch Assy Comp	1	
2	JG 5514 27	Collared Bush	1	
3	36 JL00 05	Kit Set Primary Drive & Driven Gear1		
4	JG 5514 28	Washer Clutch	1	
5	JG 5514 49	Plate (Wheel Clutch)	1	
6	36 JU00 02	Kit Friction Plate	1	
7	JG 5514 47	Pressure Plate	6	
8	JG 5514 43	Clutch Holder	1	
9	JU 5514 06	Clutch Center_G2	1	
10	JU 5514 02	Spring -Clutch	4	
11	JG 5514 51	Bolt Sh 6*22	4	
12	39 2200 11	Washer - Plain (Primary Drive Gear)1		
13	DH 1016 48	Nut Clutch Center Lock (Pre-coated)1		
14	JG 5514 23	Clutch Lifter Bearing	1	
15	DP 1012 43	Plate Judder Spring	1	
16	DP 1011 14	Spring Anti Judder	1	

FWD Front Wheel Direction

Plate No.: 18

Brand ID: 001MC629

Carburettor

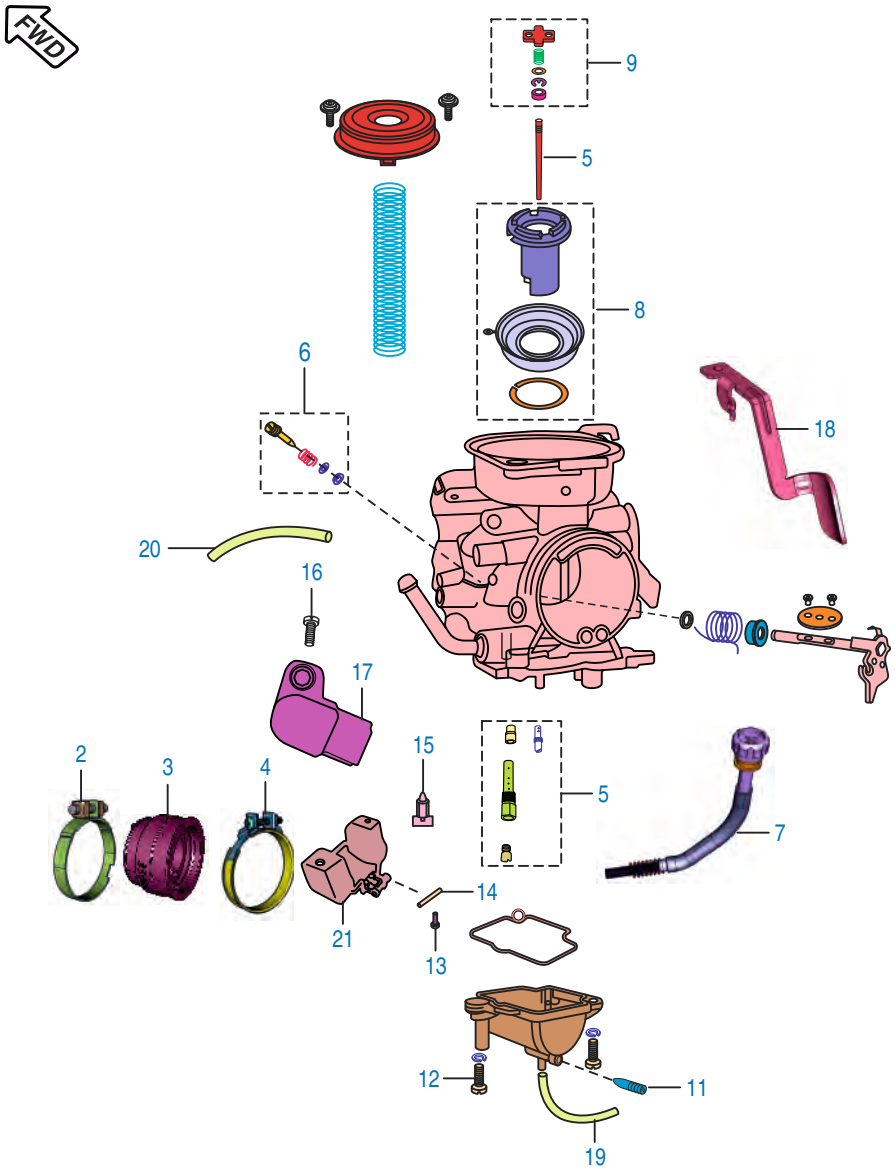

No.	Part No.	Description	Qty.	Remarks
1	JL 5812 01	Carburettor	1	
2	JL 5813 00	Clamp (Duct Carburettor)	1	
3	JL 5110 16	Insulator Rubber	1	
4	JL 5810 27	Clamp	1	
5	36 JL00 19	Kit Jet P200	1	Refer Page No. 109
6	36 JL00 20	Kit VC Screw P200	1	Refer Page No. 109
7	36 JL00 21	Kit Idling Screw	1	Refer Page No. 109
8	36 JL00 22	Kit Piston Valve P200	1	Refer Page No. 109
9	36 JL00 24	Kit Jet Needle Hardware P200	1	Refer Page No. 109
10	36 JL00 23	Kit Gasket / O-ring P200	1	Refer Page No. 109
11	JA 5813 14	Drain Screw	1	
12	CB 1210 42	Float Chamber Screw	2	
13	DH 1210 64	Screw Needle Shaft	1	
14	DH 1210 63	Float Needle	1	
15	DK 1210 47	Needle Assly.	1	
16	39 1780 01	Screw Pan - M5	2	
17	JD 3518 00	TPS Assly.	1	
18	JL 5812 04	Choke Lever	1	
19	JL 5812 05	Tube Drain Carb.	1	
20	JL 5812 06	Tube Breather	1	
21	DK 1210 45	Float Assembly	1	
22	DK 1210 58	Gasket Float Chamber	1	

FWD Front Wheel Direction

Plate No.: 19

Brand ID: 001MC629

Air Cleaner Complete

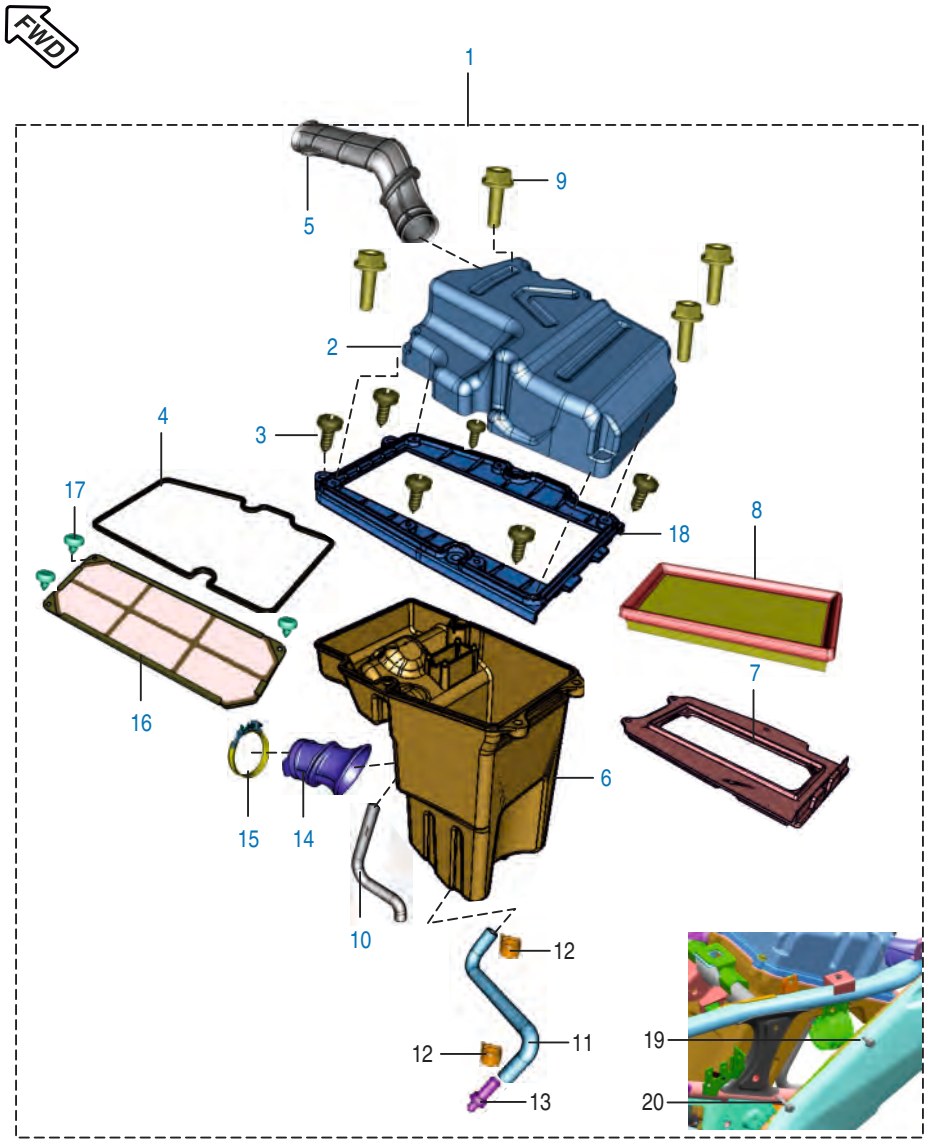

No.	Part No.	Description	Qty.	Remarks
1	JL 5810 50	Air Filter Assembly	1	
2	JL 5810 23	Assembly Top Cover	1	
3	LB B000 04	Screw Cross Pan Hd Bt6*11L	6	
4	JL 5810 25	Seal Top Cover	1	
5	JL 5810 07	Entry Duct	1	
6	JL 5810 24	Assembly Bottom Cover	1	
7	JL 5810 18	Plate Air Filter Mounting	1	N.S
8	JL 5810 09	Filter Element	1	
9	KA EM06 22	Bolt-Flange	4	
10	JL 5810 16	Tube Breather Assly	1	
11	JL 5810 15	Tube Drain Assembly	1	
12	DG 1210 02	Clamp	2	
13	DS 1211 26	Plug	1	
14	JL 5810 10	Tube Connecting	1	
15	AP 1210 64	Clamp	1	
16	JL 5810 04	Flame Arrester	1	
17	KB QA35 06	Screw Tapping Pan Slotted	3	
18	JL 5810 22	Plate Top Cover Mtg	1	
19	KA DM06 10	Bolt Flange M6-L10mm	1	RH Mounting
20	KA DA06 30	Bolt Flange M6-L33mm	1	RH Mounting
21	39 0239 11	Plain Washer	2	N.I. RH Mounting

FWD Front Wheel Direction

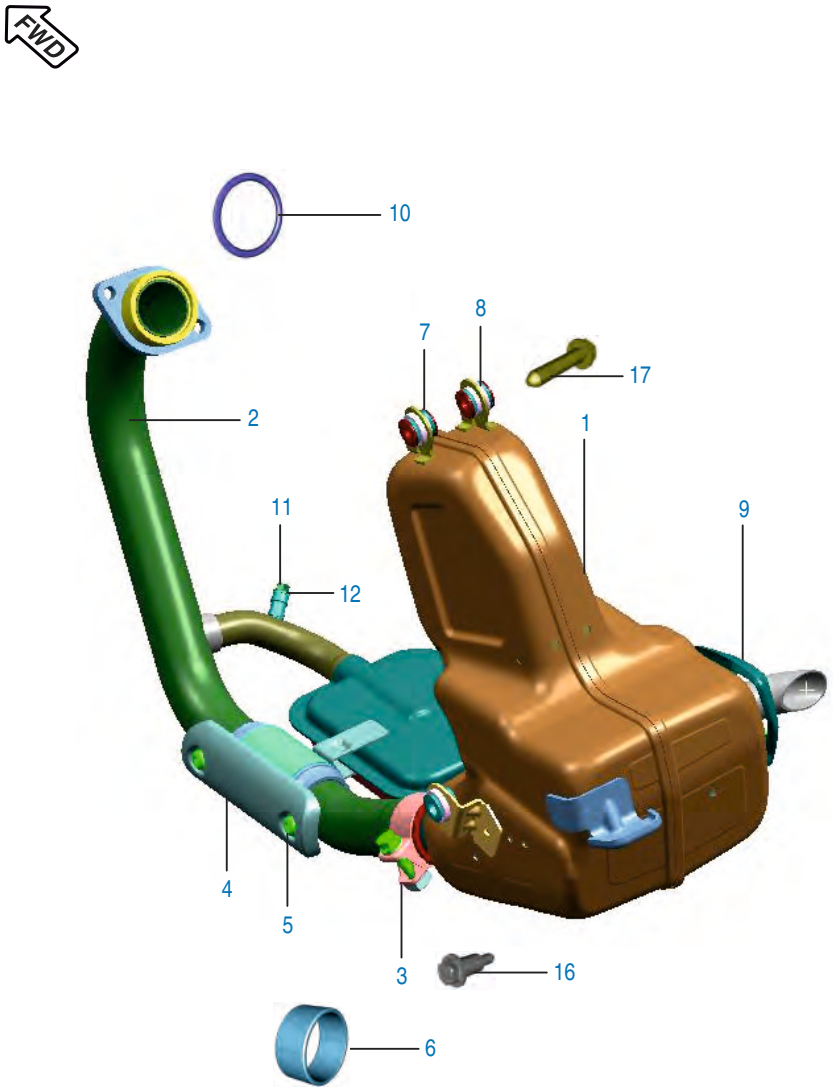

Plate No.: 20

Brand ID: 001MC629

Silencer Assembly

No.	Part No.	Description	Qty.	Remarks
1	JL 5910 52	Assembly Muffler	1	
2	JL 5910 48	Pipe Exhaust A Assly	1	
3	JG 5910 38	Band Clip	1	
4	JL 5911 44	Shield Catalytic Converter	1	
5	DH 1016 07	Truss Screw	4	
6	JG 5910 39	Gasket Muffler Pipe-A	1	
7	JG 5910 96	Bush Silencer Mounting	4	
8	JG 5910 97	Damper Silencer Mounting	4	
9	JL 5910 75	Heat Shield	1	
10	JG 5910 70	Gasket Exhaust	1	
11	39 2754 04	Bolt Hex	1	
12	39 2492 11	Plain Washer	1	
13	JG 5910 53	Damper Silencer Mounting	4	
14	KA DQ06 25	Bolt M6	2	
15	JG 5910 88	Clip Nut M6	2	
16	JL 5910 86	Bolt Stepped	2	
17	JL 5911 48	Bolt Hex Flange	2	N.S
18	39 2304 04	Bolt	2	N.I.

FWD Front Wheel Direction

Plate No.: 21

Brand ID: 001MC629

Starter Assembly

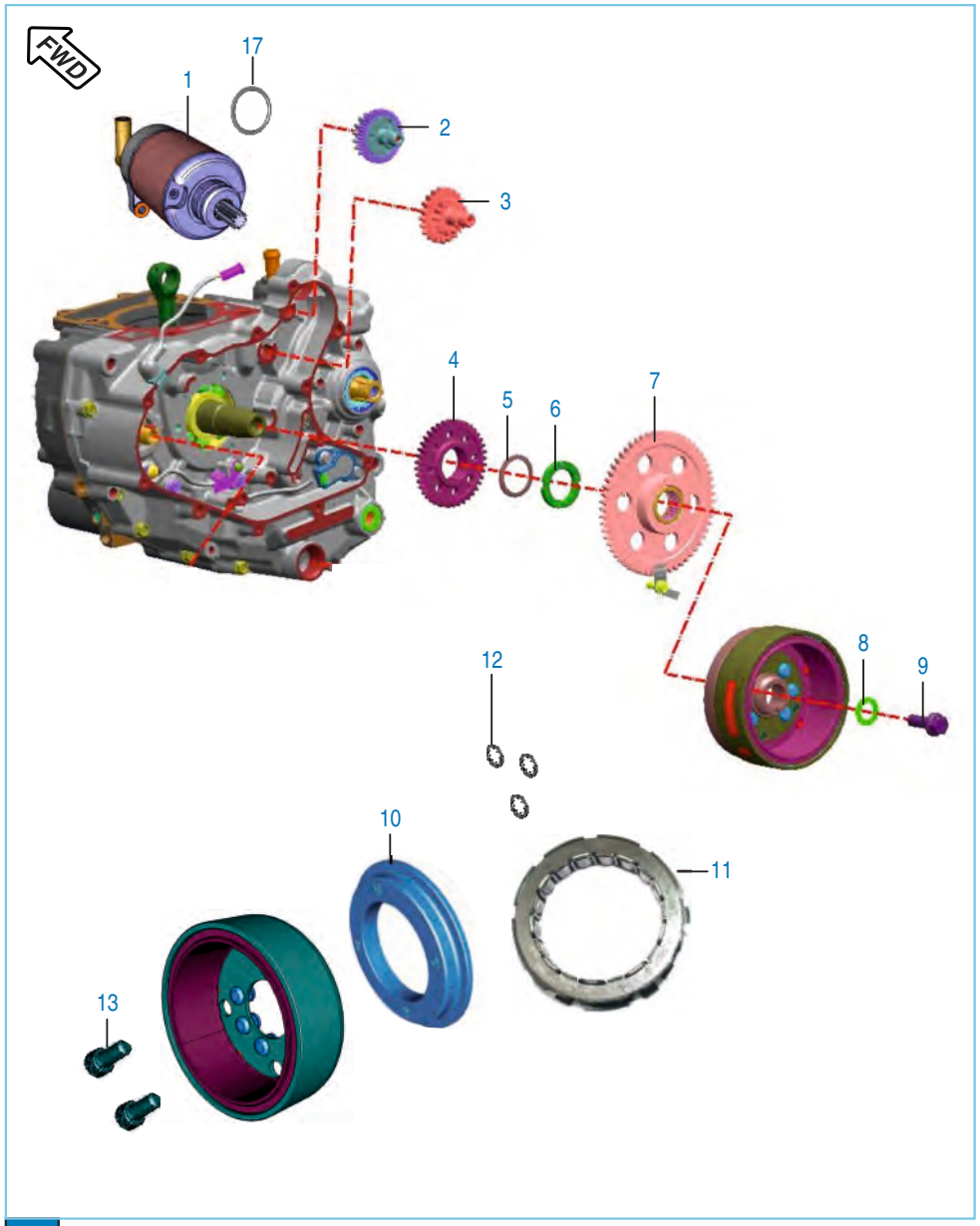

No.	Part No.	Description	Qty.	Remarks
1	JL 3516 00	Starter Motor Assly.	1	
1A	KA DQ06 25	Bolt M6-Motor mtg.	2	N.I.
2	JG 6214 13	Gear Starter Counter 2 Assy	1	
3	JG 6214 12	Gear Starter Counter 1	1	
4	JG 5310 41	Balancer Drive Gear	1	
5	JG 5310 39	Belleville Washer	1	
6	JG 5310 40	Nut Balancer	1	
7	JG 6214 17	Assembly Gear Starter Clutch	1	
8	39 2165 11	Plain Washer	1	
9	DH 1013 96	Hex Bolt Flanged	1	
10	JG 3510 19	Body Complete Starter Clutch	1	
11	JY 5514 02	Clutch One way Assly	1	
12	39 0849 14	Washer - Lock :- Toothed	4	
13	DH 1013 89	Pre-coated Screw	4	
14	JA 3516 27	'O' ring Starter Motor	1	N.I.

FWD Front Wheel Direction

Plate No.: 22

Brand ID: 001MC629

Magneto, CDI & H.T. Coil

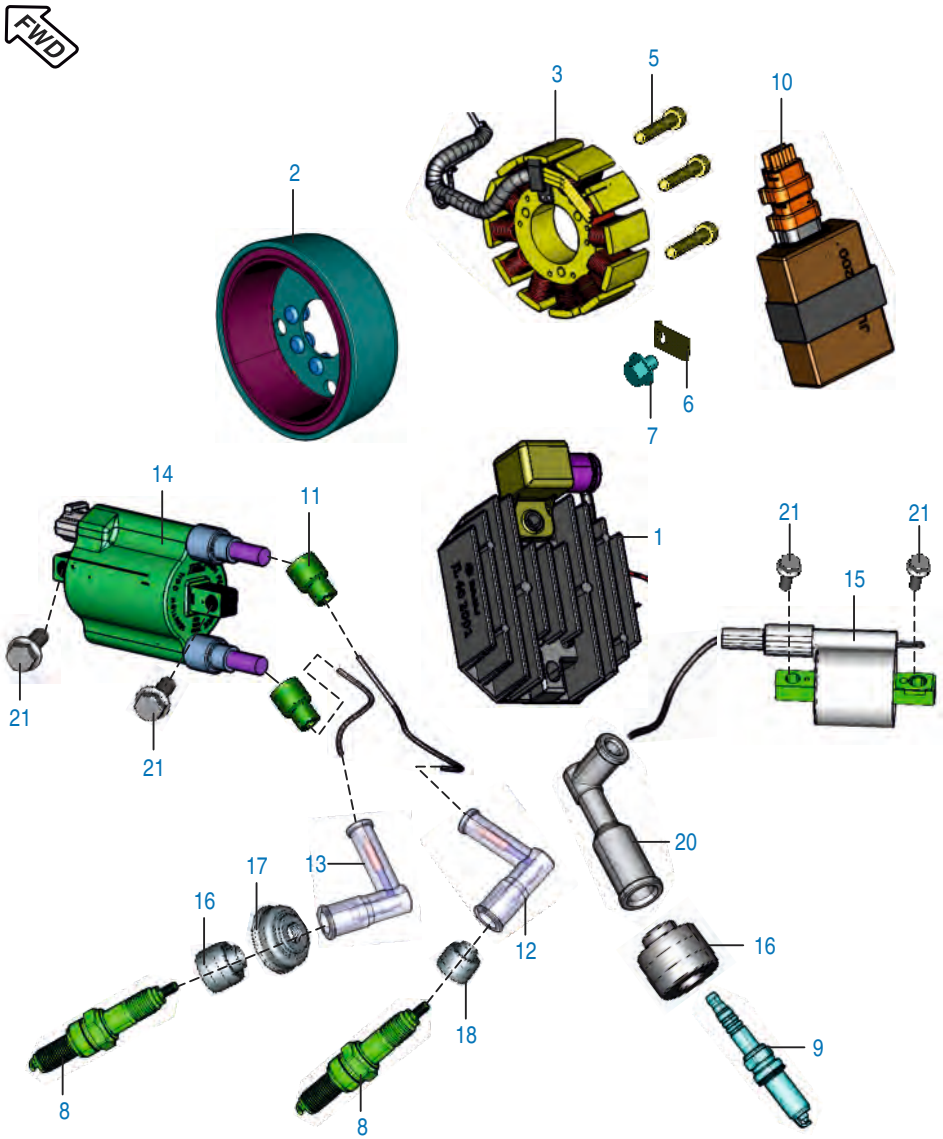

No.	Part No.	Description	Qty.	Remarks
1	JL 4020 01	Regulator Assly	1	
2	JL 3510 09	Rotor Assy. (W/O Clutch Assy)	1	
3	JL 3510 40	Stator Assly Compl	1	
4	JL 3510 05	Grommet G (Stator Cable)	1	N.S.
5	DK 1012 84	Hex Socket Head Screw(M5X0.8X35)	3	
6	DH 1011 99	Plate - Stopper (Wiring Harness)	1	
7	LA E000 10	Bolt Flange M5 X 13L	2	
8	DK 1110 28	Spark Plug RG6HC	2	
9	JL 3512 17	Ignition Spark Plug	1	
	JL 3512 18	Ignition Spark Plug	1	Make- Fedral Mogul
10	JL 3512 00	DC CDI With Sealed Coupler	1	
11	DD 1110 12	Grommet For H. T. Cable	2	
12	JD 3512 07	Spark Plug Cap	1	
13	AN 1110 15	Spark Plug Cap	1	
14	JL 3512 01	Ignition Coil with Cable LH	1	
15	JL 3512 02	Ignition Coil with Cable RH	1	
16	DH 1110 13	Grommet - Spark Plug	2	
17	DH 1110 16	Grommet - Sleeve Spark Plug	1	
18	DD 1110 11	Grommet - Spark Plug Cap	1	
20	DK 1110 11	Cap Spark Plug	1	
21	39 1944 04	Bolt - Flanged	4	
22	JL 3512 05	Kit HT Coil	1	N.I.

FWD Front Wheel Direction

Seat Assembly / Seat Lock

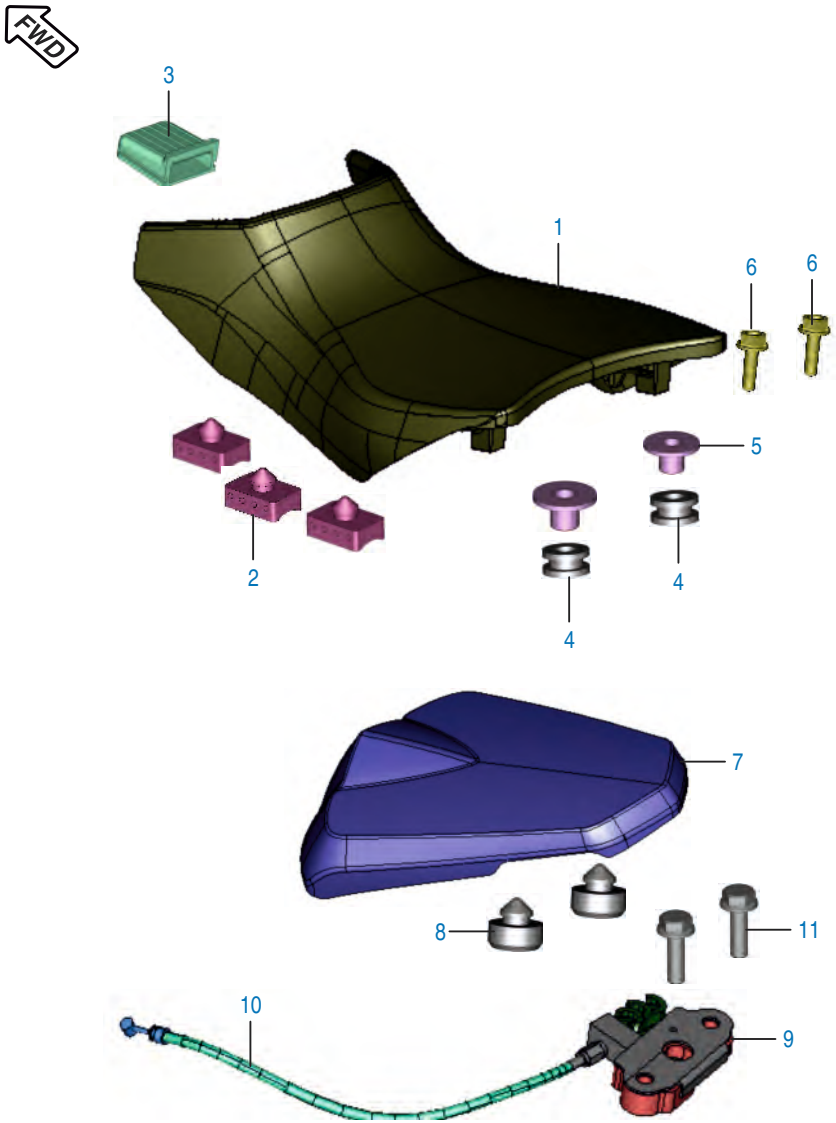

No.	Part No.	Description	Qty.	Remarks
1	JL 1910 01	Seat Assy Comp Front	1	
2	36 JL00 13	Kit Damper For Seat	1	Refer Page No.107
3	DK 2110 07	Damper Seat Front	1	
4	JG 1910 08	Collar -Seat	2	
5	FD 2110 06	Grommet - Seat	2	
6	DS 1612 87	Flange Bolt - M6	2	
7	JL 1910 04	Seat Assy Comp Rear	1	
8	JD 1910 06	Damper Round	2	
9	JG 2326 01	Lock Assy Seat Rear	1	
10	JG 2326 06	Seat Lock Cable	1	
11	39 1913 04	Bolt - Flanged	2	

FWD Front Wheel Direction

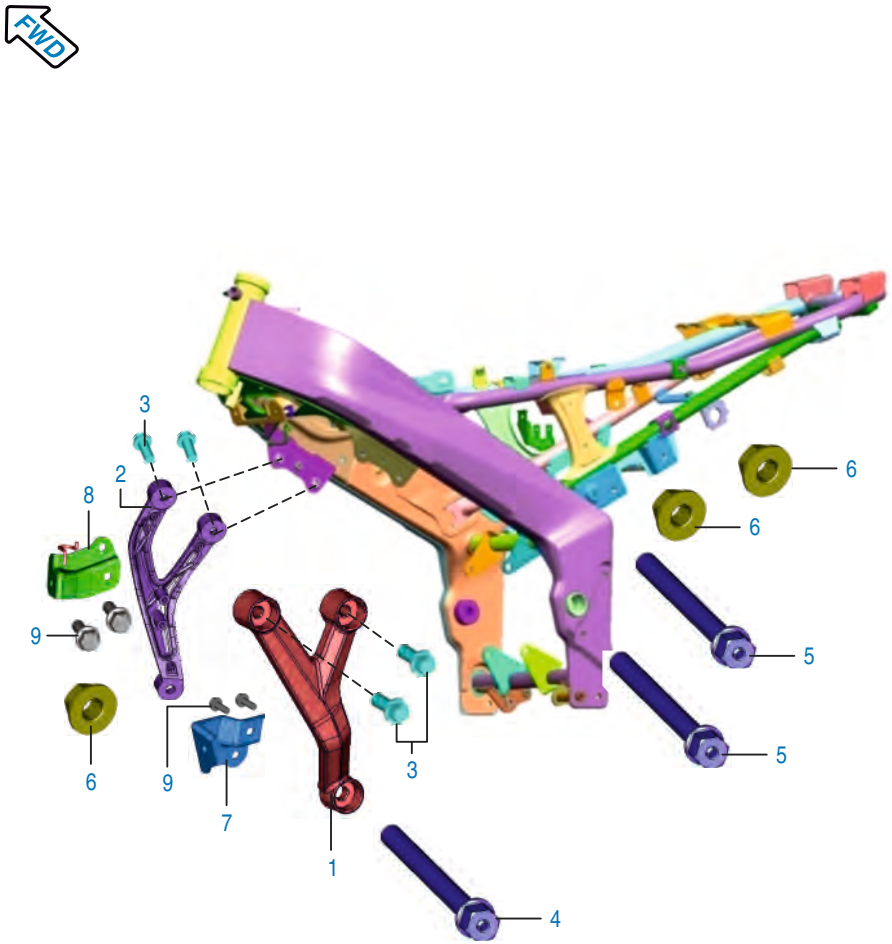

Front Wheel Direction

Plate No.: 24

Brand ID: 001MC629

Engine Mountings

No.	Part No.	Description	Qty.	Remarks
1	52 JL01 56	Engine Stay Lh	1	
2	52 JL01 57	Engine Stay Rh	1	
3	39 1951 04	Bolt - Flanged Small	4	Alt 39195604
4	JL 1110 54	Engine Mtg Bolt Front	1	
5	JA 1134 03	Flanged Bolt M10X110	2	
6	39 2723 15	Nut Flanged M10	2	
7	JL 1110 92	Bkt. Radiator Lower LH	1	
8	JL 1110 93	Bkt. Radiator Lower RH	1	
9	39 1062 04	Bolt Flanged	4	

Plate No.: 25

Brand ID: 001MC629

Frame and Frame Fittings

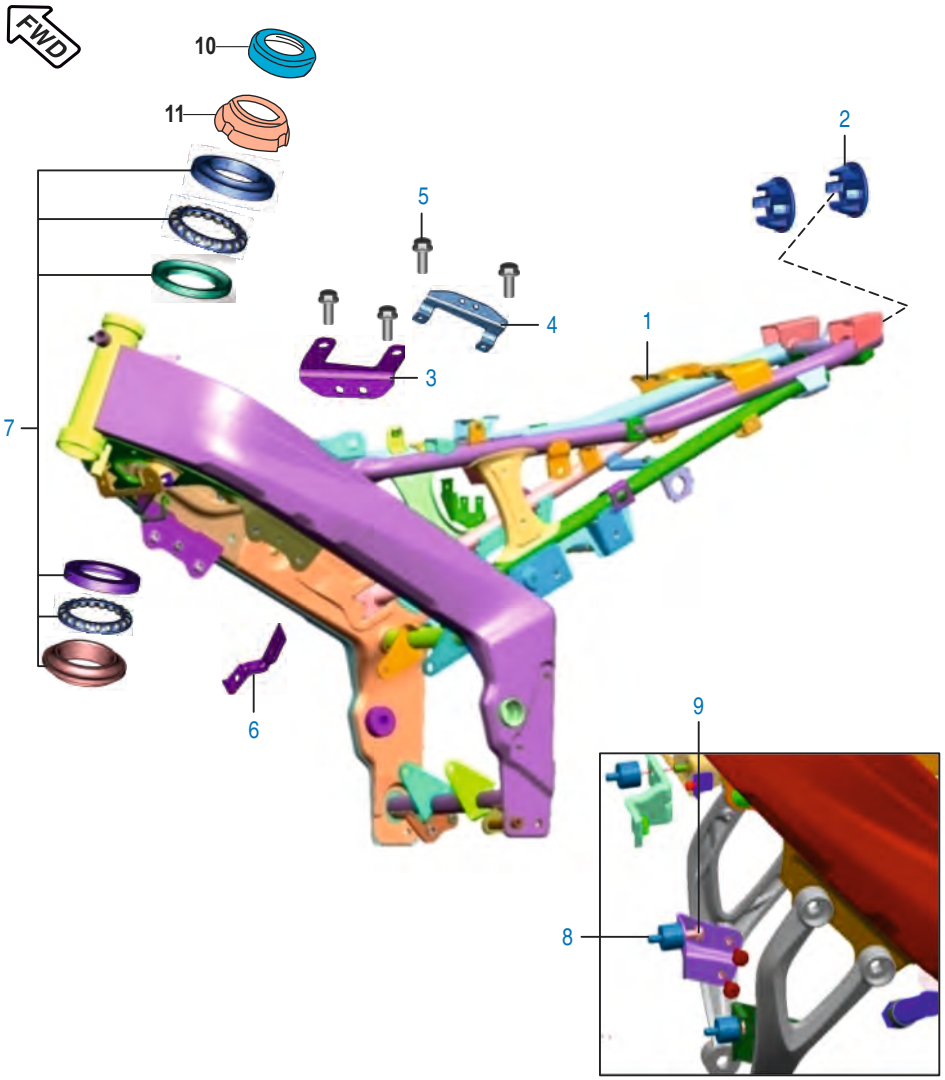

No.	Part No.	Description	Qty.	Remarks
1	JL 1111 06	Frame Assly Complete	1	
2	JL 1111 03	Cap Tube End	2	
3	JL 1110 81	Bracket Loose H.T. Coil 1	1	
4	JL 1110 82	Bracket Loose H.T. Coil 2	1	
5	39 1944 04	Bolt - Flanged	4	
6	JL 1110 78	Bracket Horn Mtg Lh	1	
7	36 JG00 11	Kit Steering head bearing	1	
8	JG 5810 14	Silent Block	4	
9	LA D000 40	Bolt Flange	2	
10	DK 1810 76	Cup Steering	1	
11	DK 1810 75	Nut Steering	1	

FWD Front Wheel Direction

Plate No.: 26

Swing Arm / Rear Shock Absorber

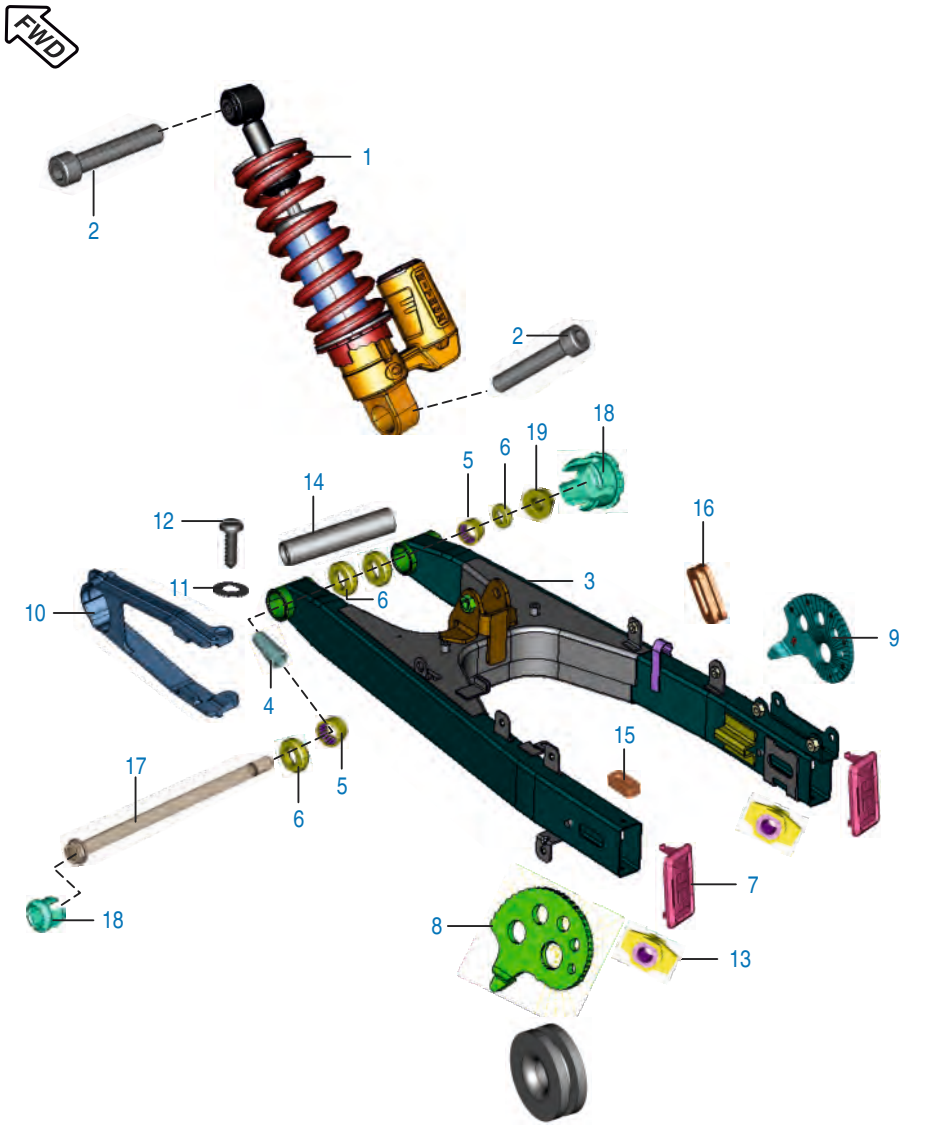

No.	Part No.	Description	Qty.	Remarks
1	JL 1220 06	Shockabsorber Mono	1	
2	LA C000 19	Bolt Socket M10 X 1.25 X 55	2	
3	JL 1220 14	Assembly Swing Arm Comp	1	JL122023
4	DG 1710 16	Sleeve	2	
5	DG 1710 18	Bearing - Needle	2	
6	DG 1710 19	Seal - Oil	4	
7	JL 1220 02	Cap Swing Arm Tube	2	
8	JL 1220 01	Adjuster Chain Lh	1	
9	JL 1220 09	Adjuster Chain Rh	1	
10	JL 1220 03	Slider Chain	1	
11	39 0454 11	Washer - Plain	2	
12	39 0553 02	Screw - Self Tapping	2	
13	JL 1220 04	Spacer Chain Adjuster	2	
14	JL 1220 08	Spacer Central Swing Arm	2	
15	JL 1812 24	Grommet I	1	
16	JL 1812 25	Grommet Ii	1	
17	DG 1710 15	Shaft - Swing Arm	1	
18	JL 1111 09	Cap -Swing Armpivot	2	
19	DG 1710 17	Nut	1	Alt. 39105315

FWD Front Wheel Direction

Plate No.: 27

Brand ID: 001MC629

Pillion Foot Rest / Holder

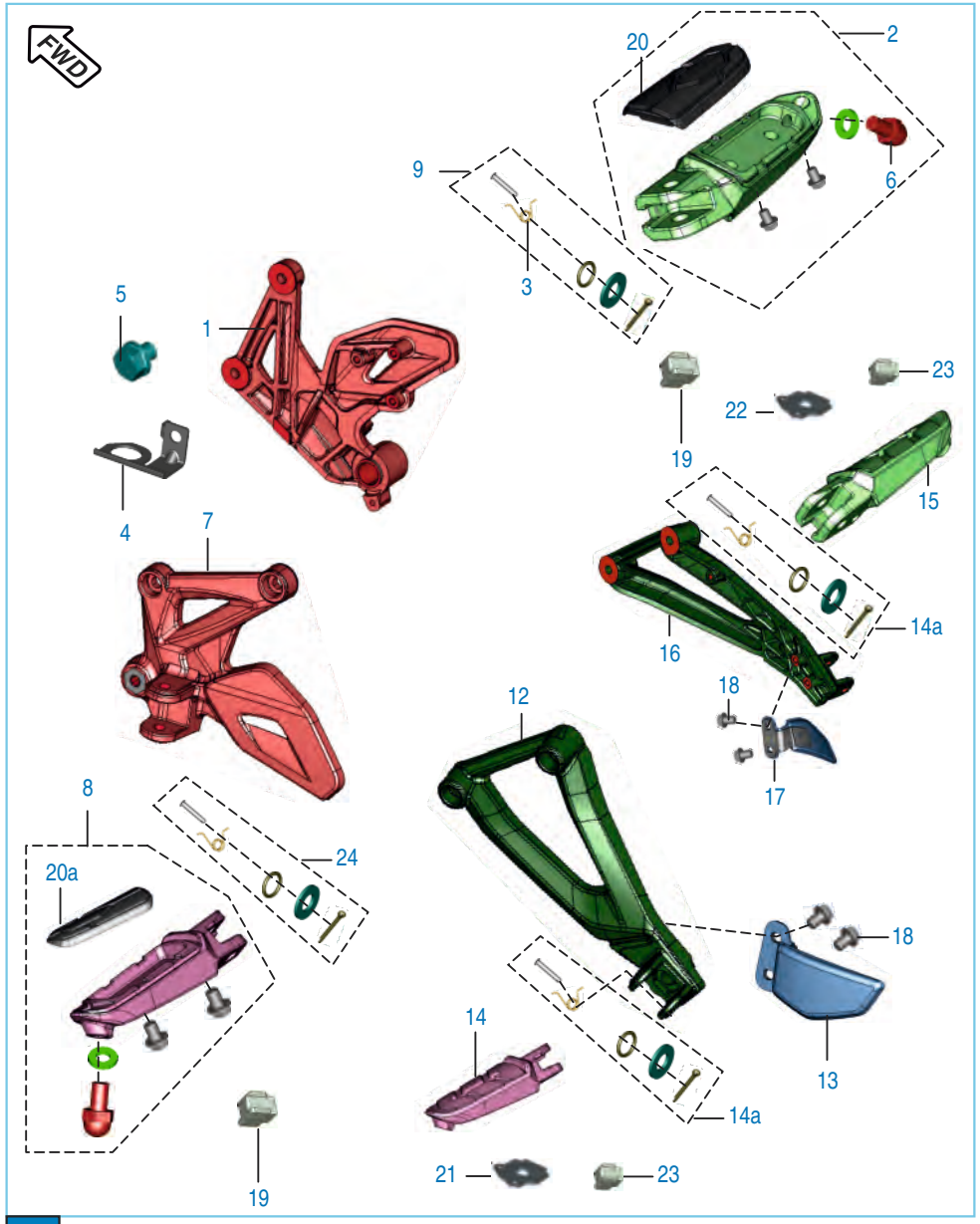

No.	Part No.	Description	Qty.	Remarks
1	JL 1130 02	Holder Step RH	1	
2	52 JL01 59	Step Assy Main RH	1	
3	JL 1130 12	Spring Torsion	1	
4	JL 1130 33	Bracket Rear Brake Switch	1	
5	39 2475 04	Bolt - Hexagon Head Flange M6	1	
6	KA CA08 20	Bolt-Socket Dia-08 L-20	2	
7	JL 1130 34	Holder Step LH	1	
8	52 JL01 58	Step Assly Main LH	1	
9	**36 JL00 41**	**Kit Main Step Hardware**	**1**	
10	LD A000 13	Washer Plain Dia 6.4Xdia 12.5X 2	1	
11	LA C000 16	Bolt Socket M8X35	2	
12	JL 1130 13	Step Holder- Pillion LH	1	
13	JL 1130 26	Flap Pillon Holder LH	1	
14	JL 1130 14	Step Pillion Assy Complete LH	1	
14a	36 Jl00 15	Kit Pillion Hardware	2	
15	JL 1130 16	Step Pillion Assy Complete RH	1	
16	JL 1130 15	Step Holder - Pillion RH	1	
17	JL 1130 27	Flap Pillon Holder RH	1	
18	39 1954 04	Bolt - Flanged :- Small	4	
19	JL 1130 28	Rubber Main Step Rider	2	
20	JL 1130 06	Rubber Pad Rider Footrest RH	2	
20a	JL 1130 06	Rubber Pad Pillion Footrest LH	2	
21	JL 1130 20	Lock Plate LH	1	
22	**JL 1130 32**	**Lock Plate RH**	**1**	
23	**JL 1130 36**	**Rubber Main Step Pillion**	**2**	

FWD Front Wheel Direction

Front Wheel Direction

Plate No.: 28

Brand ID: 001MC629

Mudguard - Front & Rear

No.	Part No.	Description	Qty.	Remarks
1	JL 1814 05	Mudflap -Front	1	
2	DS 1611 25	Guide - Cable	1	
3	DJ 1610 69	Nail - Cable Guide	1	N.I.
4	JL 1814 02	Bracket Brace Fender	1	
5	JL 1814 11	Washer Front-Fender-Mtg	2	
6	39 2038 04	Bolt - Hexagon Socket Head :- M6 2		
7	39 1946 04	Bolt - Flanged M8	4	
8	39 1943 04	Bolt - Flanged	2	
9	39 0242 11	Washer - Plain	6	
10	39 2420 01	Screw - Pan Head M5	3	
11	39 0326 15	Nut - Nyloc M5 X 0.8	3	
12	JL 1318 11	Bracket -Hose Clamp	1	
13	JL 1318 12	Bracket Hose Clamp Top	1	
14	KA Ca08 30	Bolt - Flanged	2	
15	JL 1812 09	Fender Rear Front	1	
16	JL 1812 21	Foam-Rear Fender Front	1	
17	39 0239 11	Washer - Plain	2	

Plate No.: 29

Brand ID: 001MC629

Stand Assembly

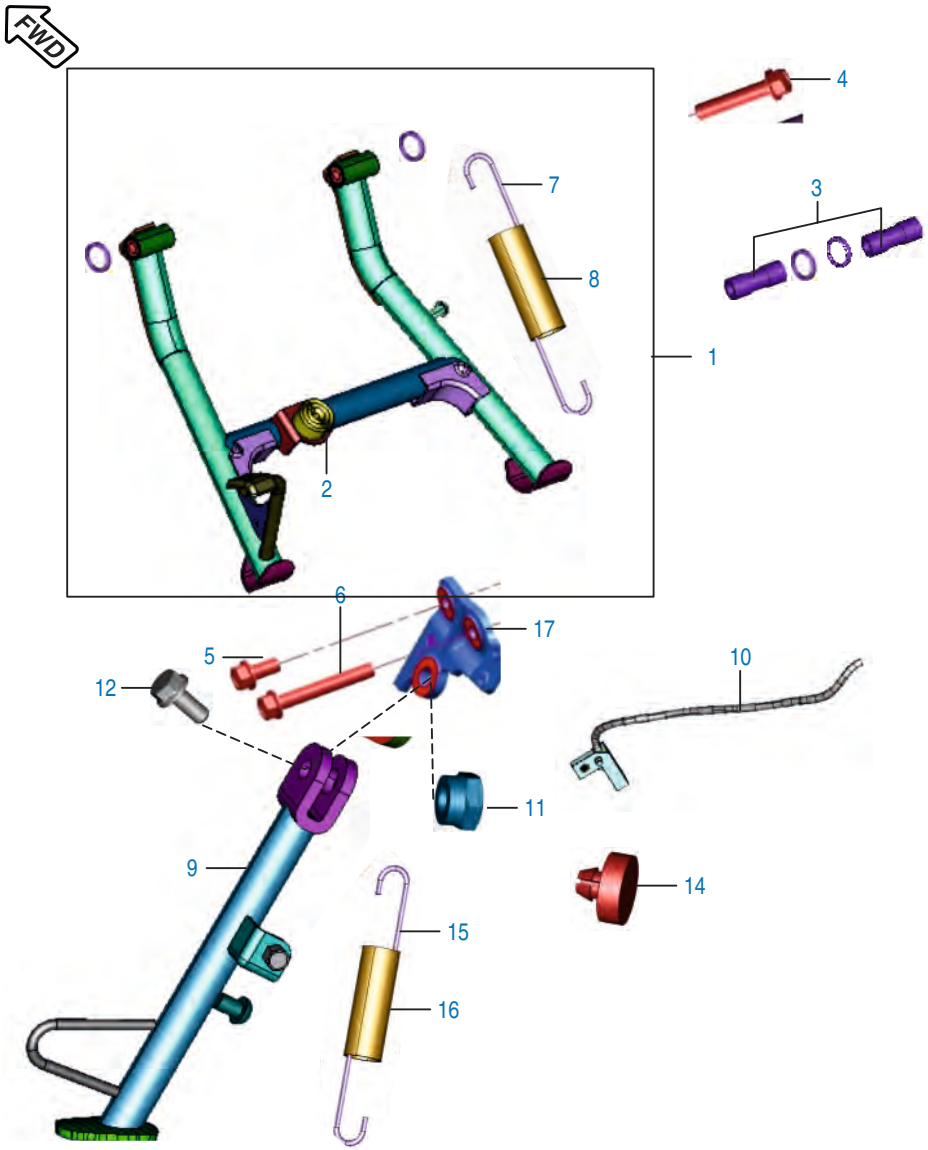

No.	Part No.	Description	Qty.	Remarks
1	36 JL00 25	Kit Center Stand	1	As an accessories
2	DG 1611 24	Damper	1	
3	JL 1132 10	Bush Main Stand LH	2	
4	39 1941 04	Bolt - Flanged M8	1	
5	39 1946 04	Bolt - Hexagon M8 X 1.25	1	
6	39 2469 04	Bolt Flanged	1	
7	JL 1132 07	Spring Main Stand	1	
8	JL 1132 12	Cover Spring Main Stand	1	
9	JL 1132 01	Assembly Side Stand	1	
10	JL 4014 02	Switch Side Stand	1	
11	39 0422 15	Nut - Nyloc M10	1	
12	DF 1611 02	Bolt For Side Stand Mounting	1	
13	39 2060 04	Bolt - Flanged	1	
14	JL 4036 00	Magnet Assembly	1	
15	JL 1132 09	Spring Side Stand	1	
16	DH 1611 46	Cover - Spring Side Stand	1	
17	JL 1132 02	Bracket Side Stand Mtg	1	

FWD Front Wheel Direction

Front Wheel Direction

Plate No.: 30

Brand ID: 001MC629

Tube / Tyre / Rim

No.	Part No.	Description	Qty.	Remarks
1	JL 1310 06	Tyre Tubeless (Size 100/80-17)	1	Not Serviceable
2	DK 1510 26	Valve Tubeless Tyre	2	
3	JL 1310 04	Wheel Rim 2.5X17	1	
4	JL 1312 09	Wheel Rim 3.5X17	1	
5	JL 1312 19	Tyre 130/70-17	1	Not Serviceable

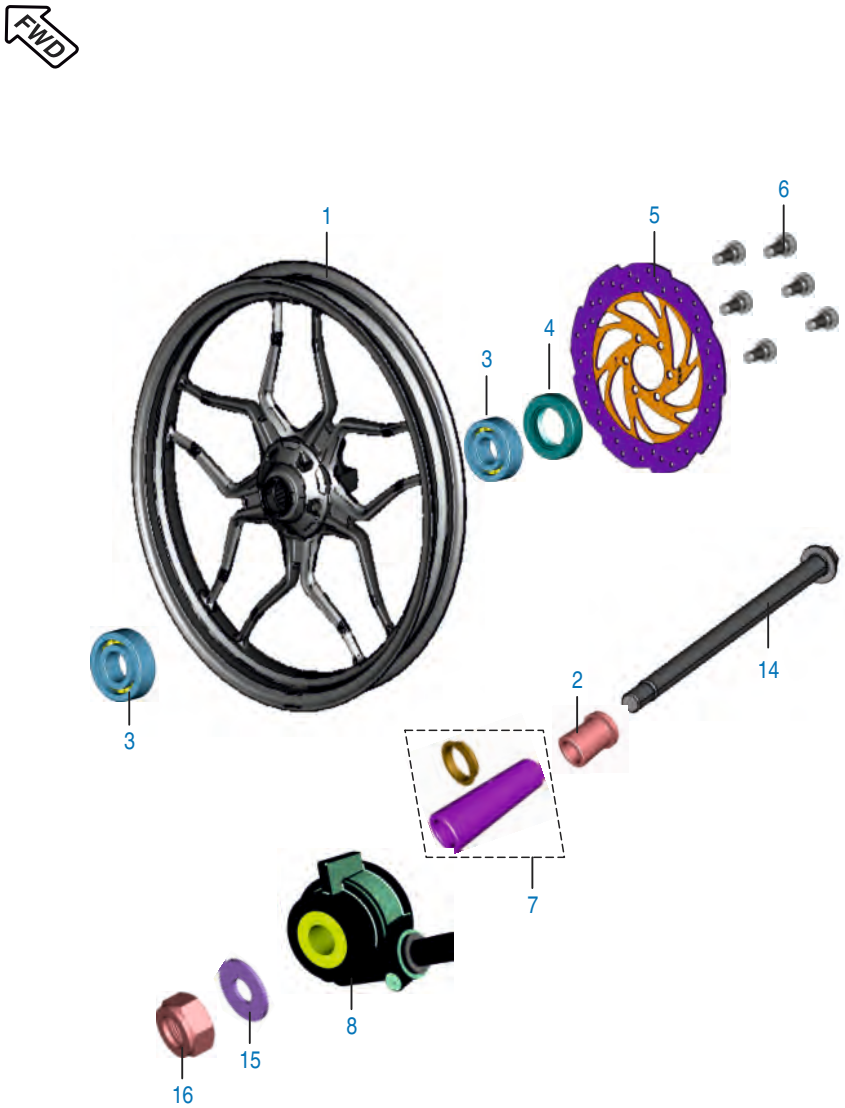

Front Wheel Direction

Plate No.: 31

Brand ID: 001MC629

Front Hub

No.	Part No.	Description	Qty.	Remarks
1	JL 1310 04	Wheel Front	1	
2	JG 1310 01	Spacer	1	
3	39 2241 20	Bearing - Ball	2	
4	DG 1510 05	Seal - Oil	1	
5	JL 1310 05	Disc Front	1	
	52 JL01 41	Disc Front (Black)	1	Ref. Cir. IB-82
6	JD 1318 11	Special Bolt M8	6	
7	JL 1310 00	Collar	1	
8	JC 1510 20	Case Meter Housing(W/O Sensor)	1	
10	JC 2010 46	Stopper	1	N.I. Sensor Mtg
11	59 2100 19	'O' Ring	1	N.I. Sensor
12	39 0900 12	Washer - Spring	1	N.I. Sensor Mtg
13	39 0840 01	Screw Pan Cross - M4	1	N.I. Sensor Mtg
14	JL 1310 01	Axle	1	
15	LD B000 29	Washer	1	
16	LC J000 02	Nut - U M14	1	

Front Master Cylinder

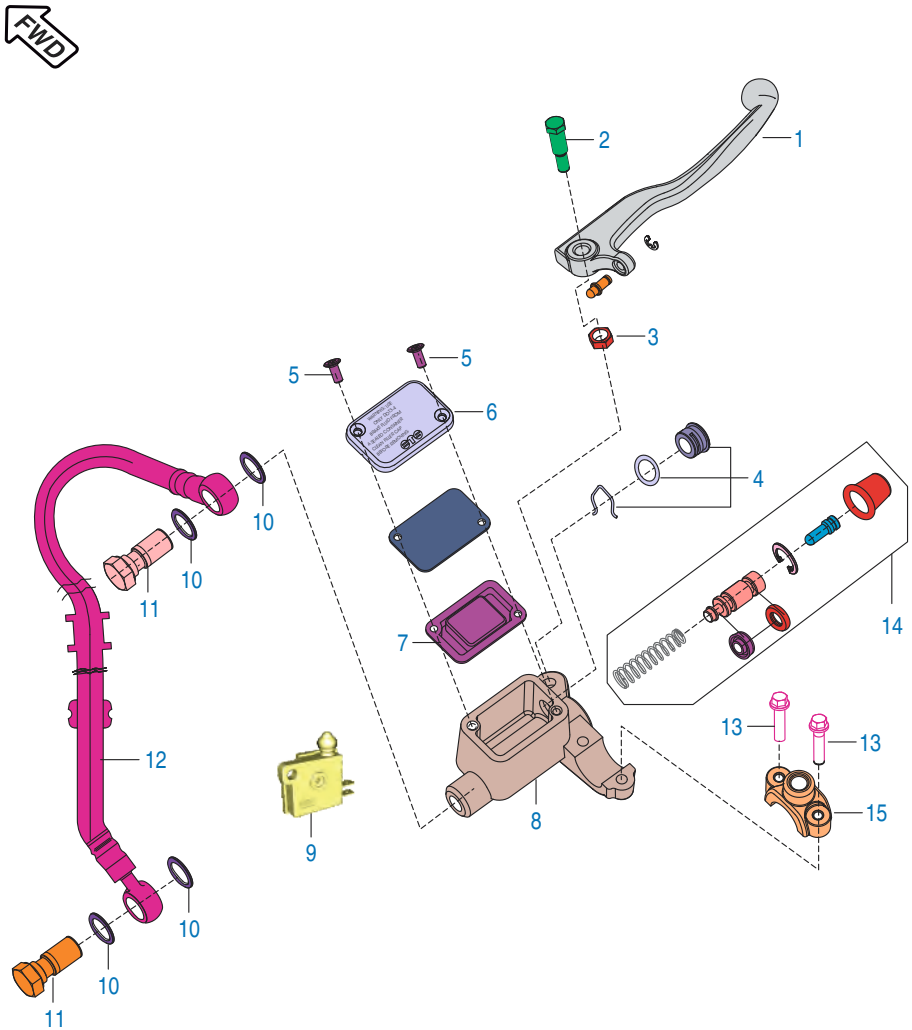

No.	Part No.	Description	Qty.	Remarks
1	DJ 1910 57	Lever Front Brake	1	
2	DJ 1910 29	Bolt Front Bracket I	1	
3	DJ 1910 30	Nut	1	
4	36 Dh19 02	Oil Window Kit	1	
5	DJ 1910 31	Screw	2	
6	DE 1910 29	Cover - Reservoir	1	
7	DE 1910 28	Diaphragm	1	
8	DJ 1910 56	Master Cylinder with lever	1	
9	DJ 2011 09	Front Brake Switch	1	
10	DE 1910 10	Washer - Copper	4	
11	DE 1910 11	Bolt - Banjo	2	
12	JL 1318 02	Hose Assembly	1	
13	LA D000 37	Bolt Flanged M8X1X50	2	
14	DJ 1910 23	Major Kit M-11		
15	DE 1910 33	Clamp - Holder : RH	1	

FWD Front Wheel Direction

Plate No.: 33

Brand ID: 001MC629

Front Disc Brake

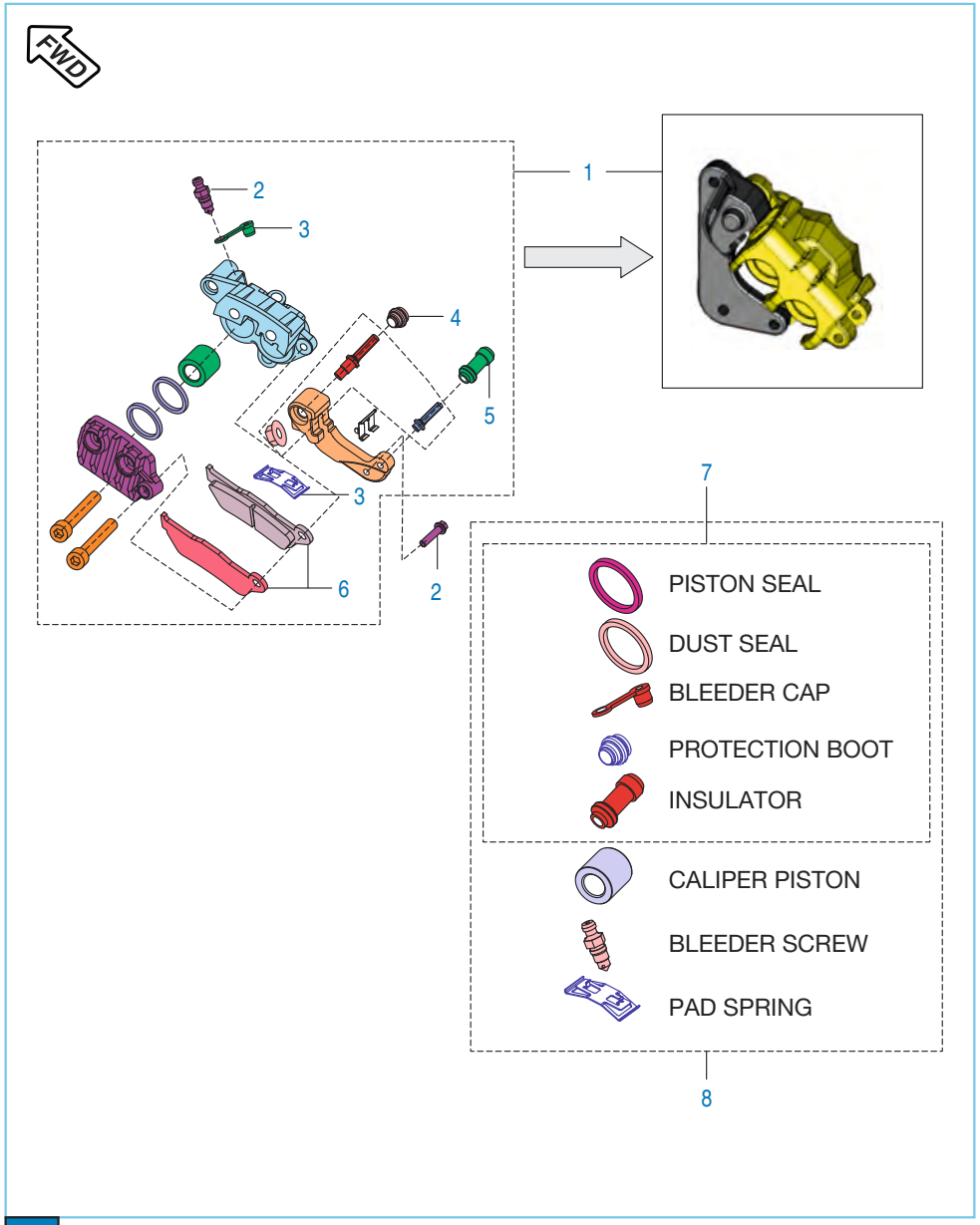

No.	Part No.	Description	Qty.	Remarks
1	JL 1318 04	Caliper Assy Brake Front	1	
2	JL 1318 06	Screw Bleeder	1	
3	DE 1510 47	Bleeder Cap	1	
4	JL 1318 07	Boot	1	
5	JL 1318 08	Spring	1	Alt. DE191033
6	JL 1318 05	Pad	1	
7	DJ 1510 74	Minor Kit	1	
8	DJ 1510 75	Major Kit	1	

FWD **Front Wheel Direction**

Plate No.: 34

Brand ID: 001MC629

Rear Hub

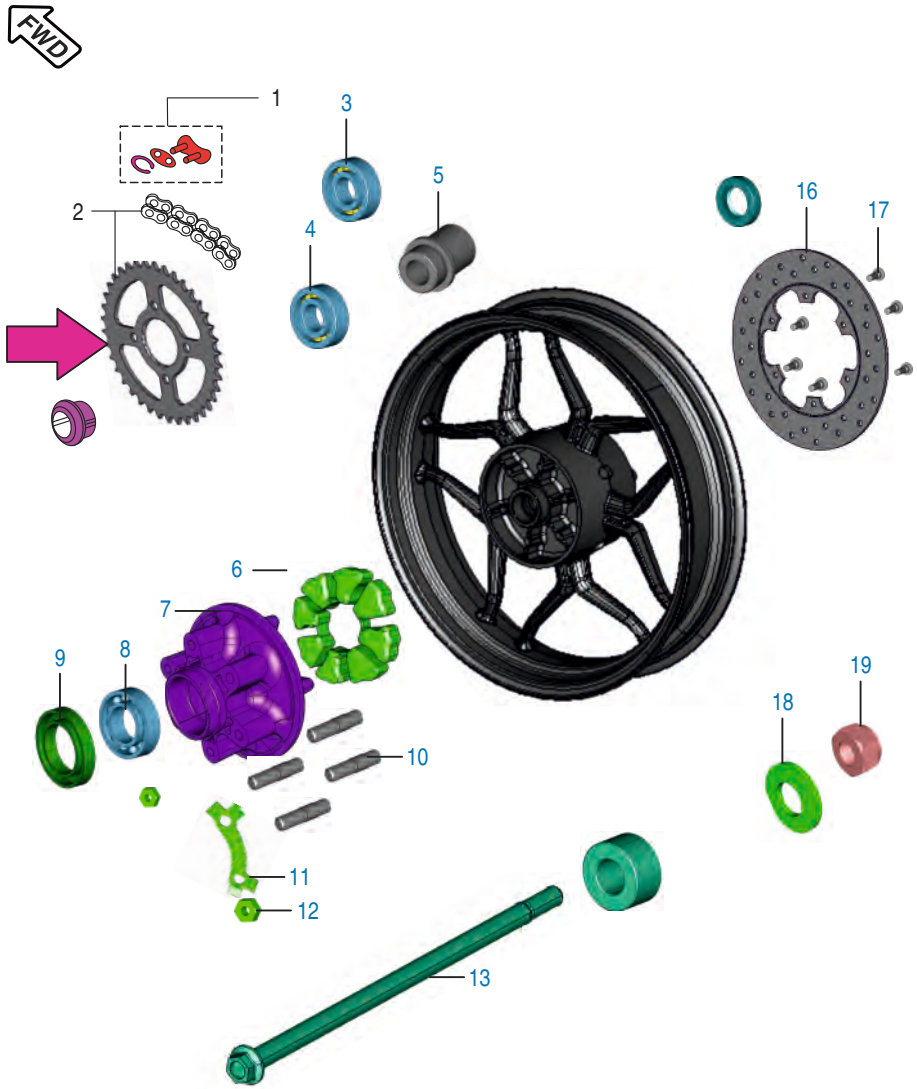

No.	Part No.	Description	Qty.	Remarks
1	DK 1510 36	Lock Set	1	
2	36 JL00 09	Kit Chain Sprocket	1	
3	39 2241 20	Bearing - Ball	1	
4	39 2242 20	Bearing - Ball	1	
5	JL 1312 16	Collar Bearing Assy	1	
6	JL 1312 32	Coupling Rubber	1	
7	JL 1312 25	Coupling	1	
8	DK 1510 13	Bearing Coupling	1	
9	DK 1510 12	Oil Seal	2	
10	LA A000 19	D Bolt	6	
11	JL 1312 26	Washer 6 Rubber	3	
12	LC A000 09	Nut	6	
13	JL 1312 03	Axle	1	
14	DK 1510 15	Sleeve	1	
15	JL 1312 11	Spacer for Coupling	1	
16	JL 1312 18	Disc Rear	1	
	52 JL01 42	Disc Rear (Black)	1	Ref. Cir. IB-82
17	39 2038 04	Bolt Hex	6	
18	LD B000 29	Washer	2	
19	LC J000 02	Nut - U	1	
20	DK 1510 81	Spacer I	1	
21	DK 1510 82	Spacer II	1	

FWD Front Wheel Direction

Plate No.: 35

Brand ID: 001MC629

Rear Disc Brake System

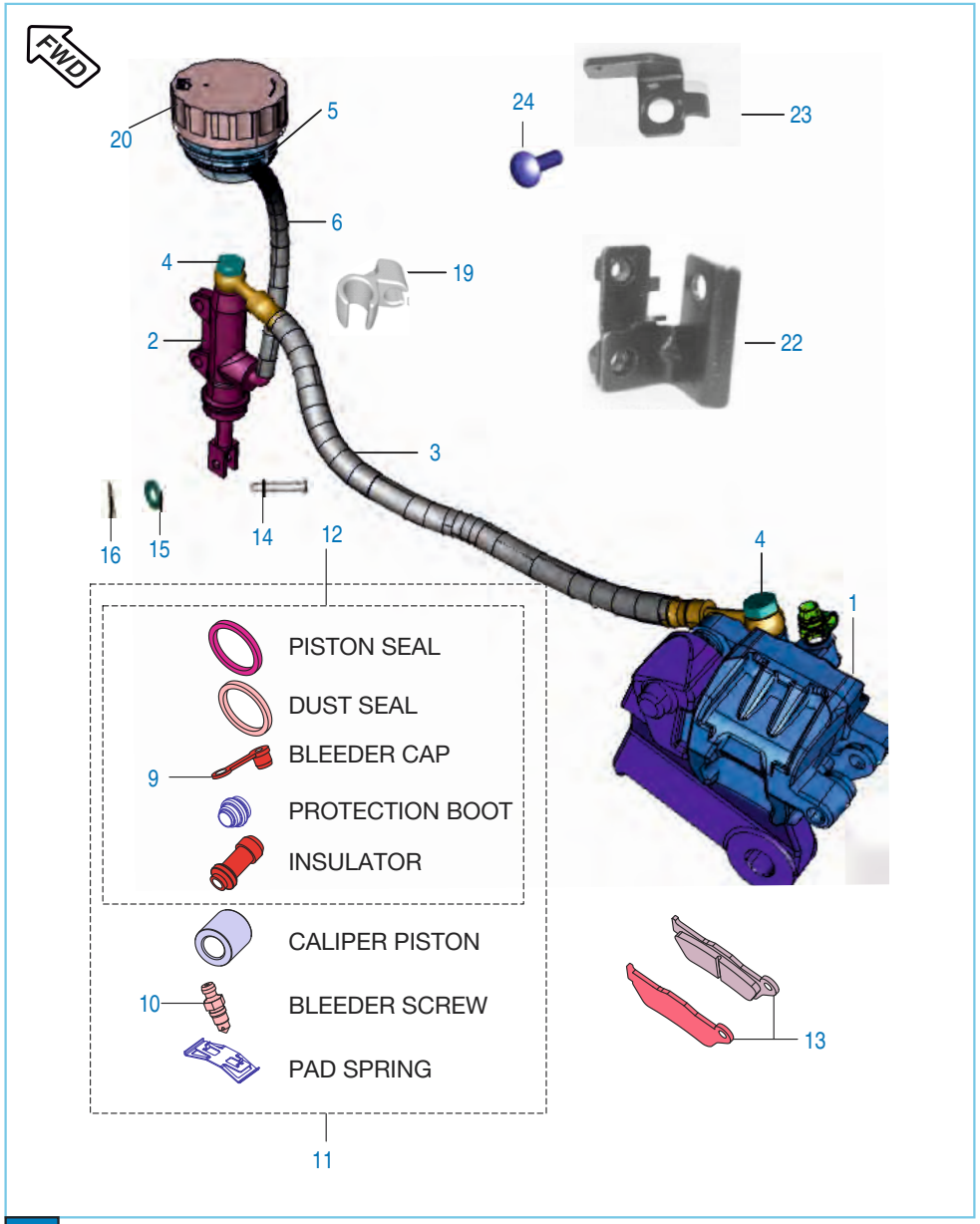

No.	Part No.	Description	Qty.	Remarks
1	DK 1510 83	Assembly Caliper	1	
2	DK 1510 31	Assembly Master Cyl. Rear	1	
3	JL 1318 03	Hose Disc Brake Rear	1	
4	DK 1510 69	Banjo Bolt	2	
5	JG 1318 21	Reservoir Rear Brake	1	
6	JL 1312 20	Hose - Reservoir	1	
7	DK 1510 63	Clip Reservoir	1	Cap Reservoir (N.I.)
8	DE 1910 10	Copper Washer	4	Banjo Bolt (N.I.)
9	DE 1510 47	Cap Bleeder Screw	1	
10	DE 1510 46	Bleeder Screw	1	
11	DK 1510 88	Caliper Piston Kit	1	N.I.
12	DK 1510 89	Caliper Piston Seal Kit	1	N.I.
13	DK 1510 85	Set Disc Pad	1	
14	30 1910 38	Pin	1	
15	39 0198 11	Washer Plain	1	
16	39 0808 08	Split Pin	1	
17	DK 1510 73	Master Cyl. Major kit	1	N.I.
18	DK 1510 74	Master Cyl. Minor kit	1	N.I.
19	JL 1318 77	Clamp	1	
20	DK 1510 45	Cap Reservoir Rear Brake	1	
21	36 JG00 18	Reservoir with Cap Rear Brake	1	N.I.
22	JL 1318 41	Bracket Reservoir mounting	1	
23	JL 1318 78	Bracket Reservoir Cap	1	
24	39 2420 01	Screw	1	Alt. 39169801

FWD Front Wheel Direction

Plate No.: 36

Rear Brake Pedal

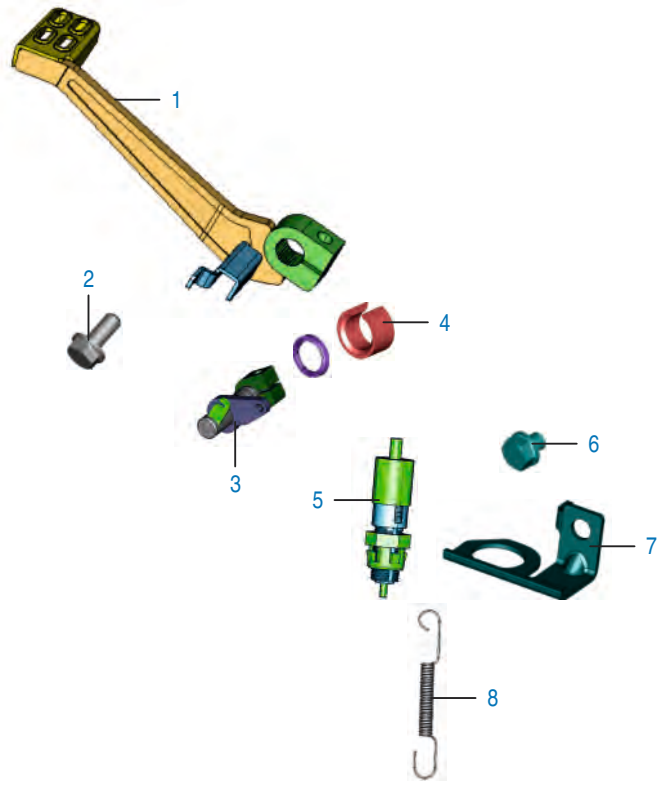

No.	Part No.	Description	Qty.	Remarks
1	JL 1610 01	Brake Pedal	1	
2	39 1769 04	Bolt - Flanged : M8	1	
3	JL 1610 10	Shaft Assy Brake Lever	1	
4	DH 1910 13	Spacer Brake Shaft assly.	1	
5	31 2010 79	Switch - Rear Brake	1	
6	39 2475 04	Hex. head bolt	1	
7	JL 1130 33	Bracket Rear brake switch	1	
8	JL 1610 06	Spring Rear Brake Switch	1	
9	DH 1910 06	Spring - Brake Pedal	1	N.I.

FWD Front Wheel Direction

Plate No.: 37

Brand ID: 001MC629

Handle Bar Assly

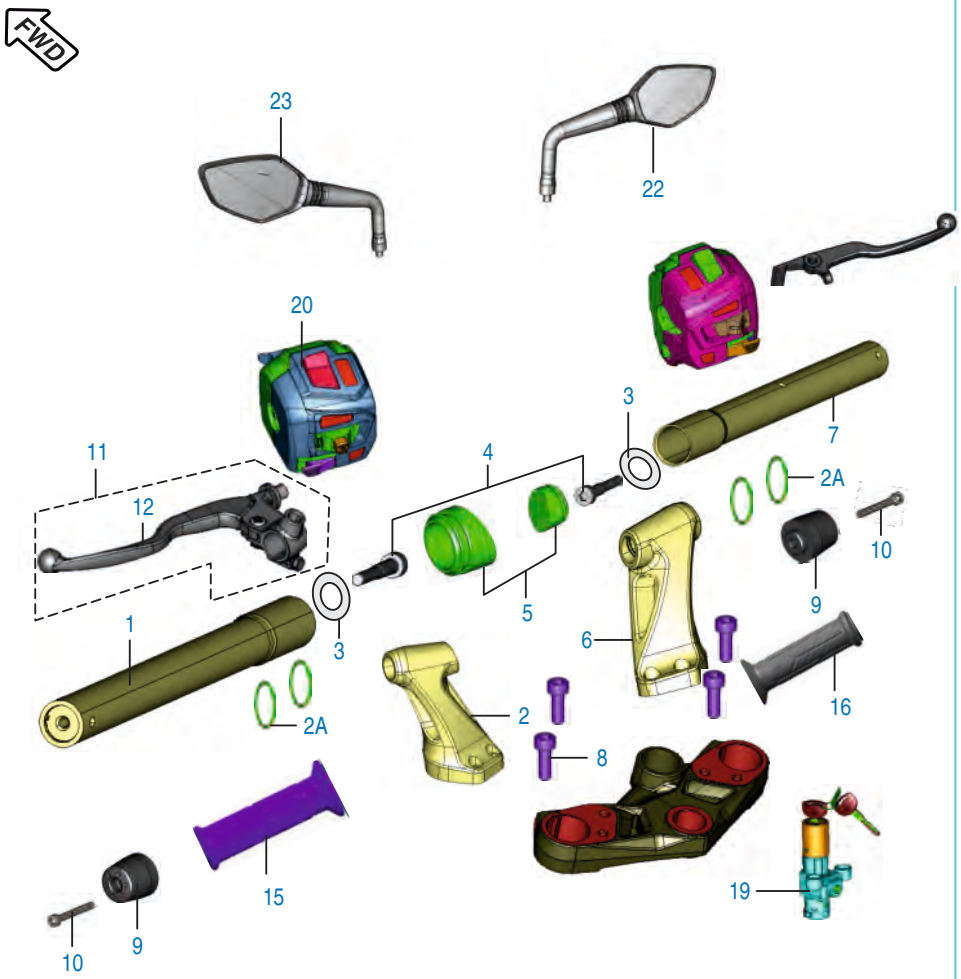

No.	Part No.	Description	Qty.	Remarks
1	JL 1510 21	Handle Bar Tube LH assly.	1	
2	JL 1510 26	Holder Handle LH	1	
	56 JL31 5X	Holder Handle LH (Stoic Black)	1	Ref. Cir. IB-82
2A	JL 1510 38	O ring	4	
3	39 1180 11	Washer - Plain	2	
4	LA C000 20	Bolt Socket M8X1.25Px55L	2	
5	JL 1510 28	Plug Handle Holder	2	
6	JL 1510 30	Holder Handle RH	1	
	56 JL32 5X	Holder Handle RH (Stoic Black)	1	Ref. Cir. IB-82
7	JL 1510 34	Handlebar Tube Assy RH	1	
8	DG 1810 08	Bolt - Socket	4	
9	JL 1510 35	Handlebar Weight	2	
10	39 2427 04	Bolt - Hexagon Socket Head Cap:M62		
11	DJ 1910 82	Lever & Support Holder Assly LH	1	
12	DJ 1910 83	Lever LH For New Clutch Switch	1	
13	DJ 2012 46	Clutch Switch (6Amp Diode)	1	N.I.
14	DD 1910 15	Clamp - Rubber	1	
15	JL 1610 03	Handle Grip LH	1	
16	JL 1610 08	Grip Hand Assy RH	1	
17	DH 1910 17	Pipe - Throttle	1	N.I.
18	JL 1510 23	Lock Set 3 In 1	1	N.I.
19	JL 4014 03	Switch Ignition	1	
20	JL 4014 00	Switch Control LH	1	
21	JL 4014 01	Switch Control RH	1	
22	JL 2316 01	Mirror Assly RH	1	
23	JL 2316 00	Mirror Assly LH	1	

FWD Front Wheel Direction

Plate No.: 38

Brand ID: 001MC629

Front Fork

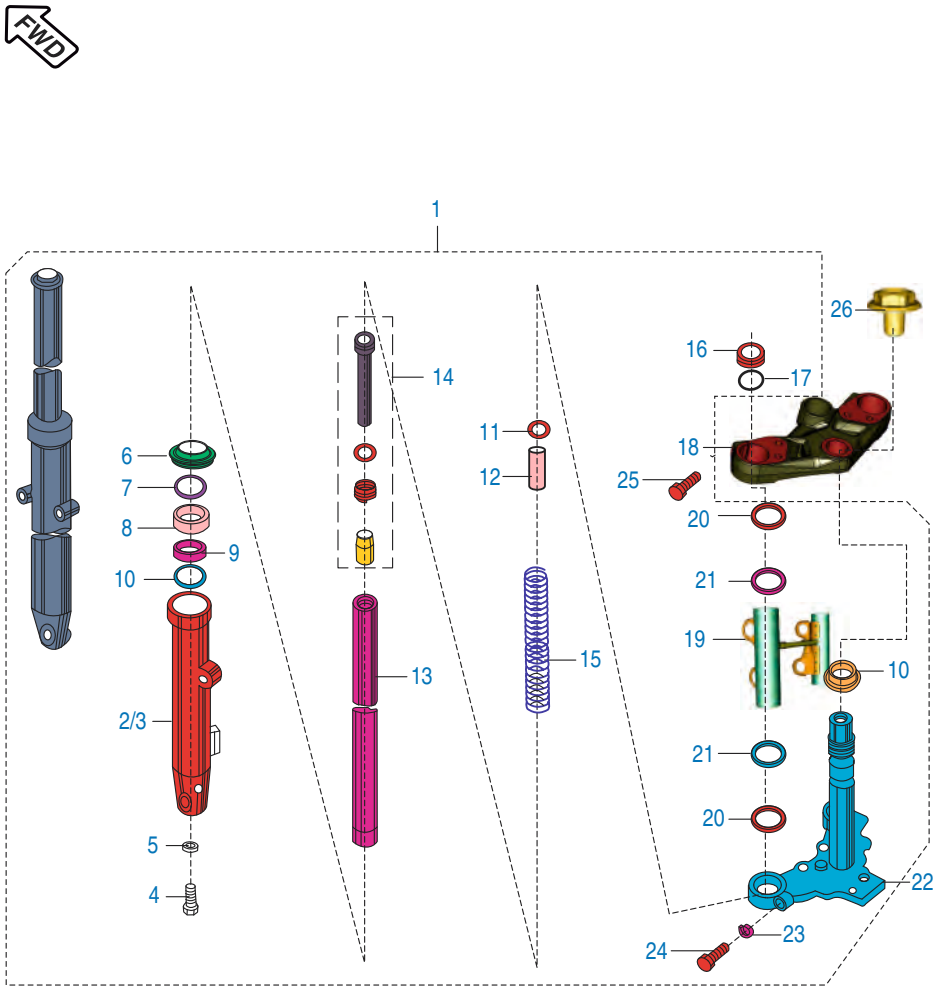

No.	Part No.	Description	Qty.	Remarks
1	JL 1510 24	Fork Assly- Front	1	
2	JL 1510 02	Tube Outer LH	1	
3	JL 1510 03	Tube Outer RH	1	
4	DK 1810 06	Socket Headed Bolt - M10 X1.5X352		
5	DK 1810 07	Copper Washer	2	
6	DK 1810 21	Inner Dust Seal	2	
7	DK 1810 18	Washer Seal	2	
8	DK 1810 19	Oil Seal	2	
9	DK 1810 17	Guide Bush	2	
10	DK 1810 20	Oil Seal Stopper	2	
11	DK 1810 15	Washer	2	
12	JL 1510 12	Spacer Tube	2	
13	JL 1510 04	Fork Pipe Spinning	2	
14	DK 1810 09	Cap Oil Lock	2	
	DK 1810 10	Seat Pipe	2	
	DK 1810 12	Piston Ring	2	
	DK 1810 13	Rebound Spring	2	
15	DK 1810 73	Spring Main Spring	2	
16	DK 1810 22	Fork Bolt	2	
17	DK 1810 23	O' Ring	2	
18	JL 1510 32	Upper Bracket	1	
18	56 JL33 5X	Upper Bracket (Stoic Black)	1	Ref. Cir. IB-82
19	JL 1812 35	Lamp Shade Assy	1	
20	JC 1810 23	Cover Cushion	4	
21	JC 1810 22	Cove Trail B	4	

FWD Front Wheel Direction

Plate No.: 38

Front Fork

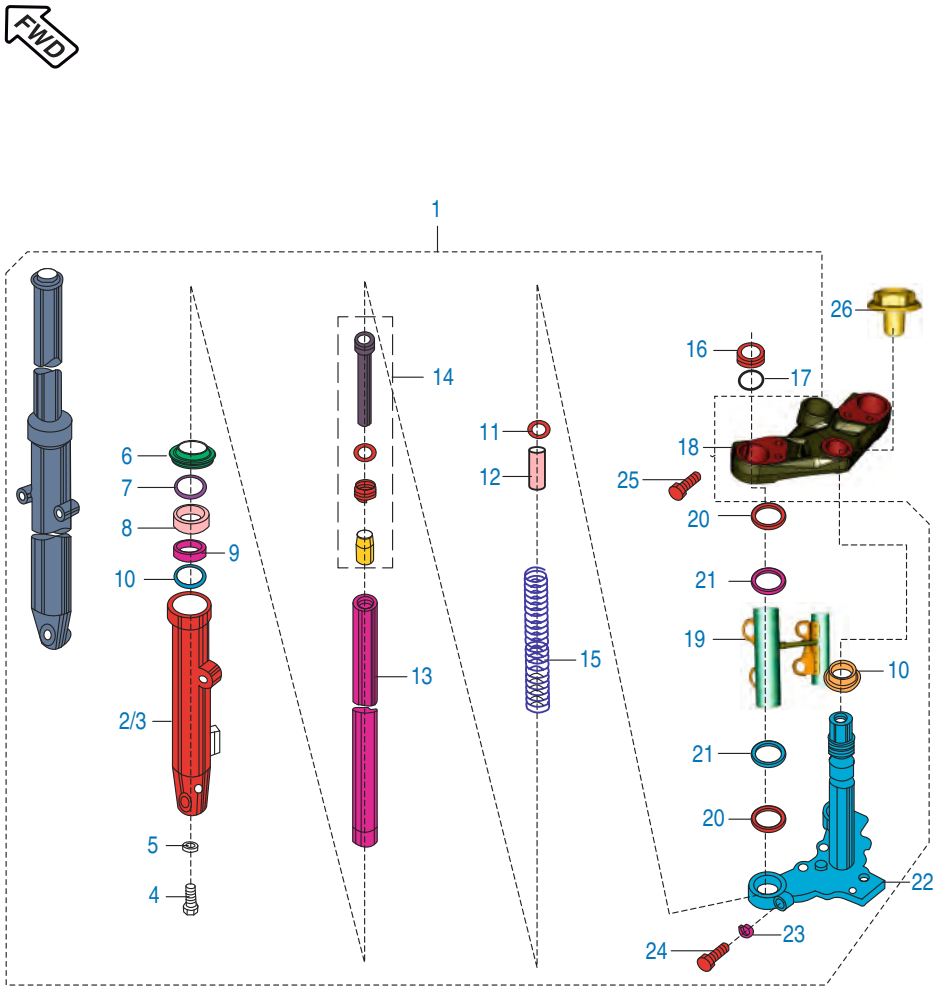

No.	Part No.	Description	Qty.	Remarks
22	JL 1510 37	Under Bkt Assy Complete	1	
23	DK 1810 25	Spring Washer	2	
24	DK 1810 28	Bolt	2	
25	DG 1810 08	Bolt - Socket	2	
26	JL 1510 36	Steering Top Bolt	1	

FWD Front Wheel Direction

Plate No.: 39

Painted Parts and Decals

No.	Part No.	Description	Qty.	Remarks
1	52 JL01 81	Tank Cover Top P200 Saffire Blue	1	N.S
	52 JL01 79	Tank Cover Top P200 Black	1	N.S
	52 JL01 82	Tank Cover Top P200 White	1	N.S
	52 JL01 80	Tank Cover Top P200 Red	1	N.S
2	52 JL02 18	Tank Cover Side LH - Saffire Blue	1	
	56 JL20 X3	Tank Cover Side LH - Black	1	
	52 JL02 20	Tank Cover Side LH - White	1	
	52 JL02 16	Tank Cover Side LH - Red	1	
3	52 JL02 19	Tank Cover Side RH - Saffire Blue 1		
	56 JL21 X3	Tank Cover Side RH - Black	1	
	52 JL02 21	Tank Cover Side RH - White	1	
	52 JL02 17	Tank Cover Side RH - Red	1	
4	52 JL01 96	Side Mask RH - Saffire Blue	1	
	52 JL01 92	Side Mask RH - Black	1	
	52 JL01 98	Side Mask RH - White	1	
	52 JL01 94	Side Mask RH - Red	1	
5	52 JL01 95	Side Mask LH - Saffire Blue	1	
	52 JL01 91	Side Mask LH - Black	1	
	52 JL01 97	Side Mask LH - White	1	
	52 JL01 93	Side Mask LH - Red	1	
6	52 JL01 89	Front Fender Blue	1	
	JL 7501 X3	Front Fender Black	1	
	52 JL01 90	Front Fender White	1	
	52 JL01 88	Front Fender Red	1	

FWD Front Wheel Direction

Plate No.: 39

Painted Parts and Decals

No.	Part No.	Description	Qty.	Remarks
7	56 JL10 5N	Seat Cowl Assy - Blue	1	
	56 JL10 X3	Seat Cowl Assy - Black	1	
	56 JL10 5Y	Seat Cowl Assy - White	1	
	56 JL10 4R	Seat Cowl Assy - Red	1	
8	52 JL00 54	Cover Side LH Assly	1	
9	52 JL00 55	Cover Side RH Assly	1	
10	JL 2330 04	3D Decal Tank RH	1	
11	JL 2330 03	3D Decal Tank LH	1	
12	JL 2330 02	'B' Logo	1	
13	JL 2331 09	Fairing DCL LH Upper - Blue	1	
	JL 2330 00	Fairing DCL LH Upper - Black	1	Pls. Refer Kit List From
	JL 2330 93	Fairing DCL LH Upper - White	1	Page No. 110 Onwards
	JL 2330 77	Fairing DCL LH Upper - Red	1	
13a	JL 2331 10	Fairing DCL RH Upper - Blue	1	
	JL 2330 01	Fairing DCL RH Upper - Black	1	Pls. Refer Kit List From
	JL 2330 94	Fairing DCL RH Upper - White	1	Page No. 110 Onwards
	JL 2330 78	Fairing DCL RH Upper - Red	1	
14	JL 2331 11	Fairing DCL LH Lower - Blue	1	Pls. Refer Kit List From
	JL 2330 95	Fairing DCL LH Lower - White	1	Page No. 110 Onwards
	JL 2330 79	Fairing DCL LH Lower - Red	1	
14a	JL 2331 12	Fairing DCL RH Lower - Blue	1	Pls. Refer Kit List From
	JL 2330 96	Fairing DCL RH Lower - White	1	Page No. 110 Onwards
	JL 2330 80	Fairing DCL RH Lower - Red	1	
15	JL 7401 X3	Tank Cover Top	1	Common For All
16	JL 2330 05	Decal Side Cover 4 Valve	2	

FWD Front Wheel Direction

Plate No.: 39

Painted Parts and Decals

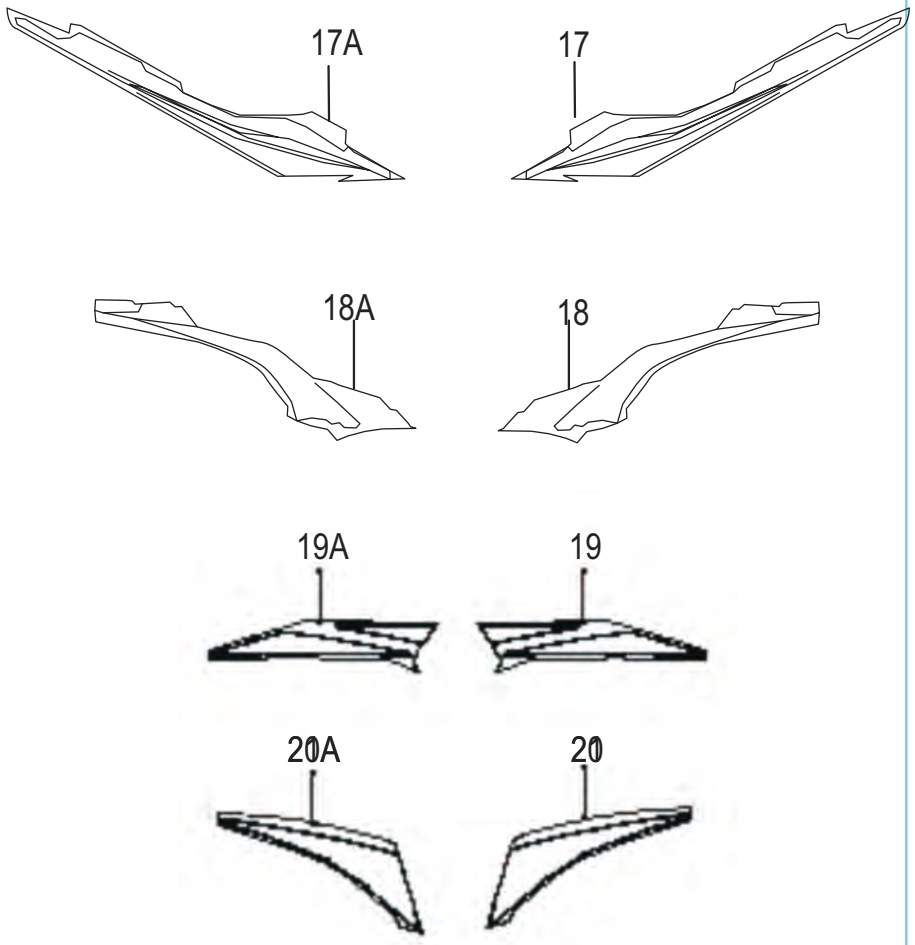

No.	Part No.	Description	Qty.	Remarks
17	JL 2331 19	Seat Cowl Decal LH Upper - Blue	1	
	JL 2330 06	Seat Cowl Decal LH Upper - Black	1	Pls. Refer Kit List From
	JL 2331 03	Seat Cowl Decal LH Upper - White	1	Page No. 110 Onwards
	JL 2310 87	Seat Cowl Decal LH Upper - Red	1	
17a	JL 2331 20	Seat Cowl Decal RH Upper - Blue	1	
	JL 2330 06	Seat Cowl Decal RH Upper - Black	1	Pls. Refer Kit List From
	JL 2331 04	Seat Cowl Decal RH Upper - White	1	Page No. 110 Onwards
	JL 2310 88	Seat Cowl Decal RH Upper - Red	1	
18	JL 2331 21	Seat Cowl Decal LH Lower - Blue	1	Pls. Refer Kit List From
	JL 2330 06	Seat Cowl Decal LH Lower - Black 1		Page No. 110 Onwards
	JL 2331 05	Seat Cowl Decal LH Lower - White 1		
	JL 2310 89	Seat Cowl Decal LH Lower - Red	1	
18a	JL 2331 22	Seat Cowl Decal RH Lower - Blue 1		Pls. Refer Kit List From
	JL 2330 06	Seat Cowl Decal RH Lower - Black 1		Page No. 110 Onwards
	JL 2331 06	Seat Cowl Decal RH Lower - White 1		
	JL 2310 90	Seat Cowl Decal RH Lower - Red	1	
19	JL 2331 15	Spoiler Decal LH Upper - Blue	1	Pls. Refer Kit List From
	JL 2330 99	Spoiler Decal LH Upper - White	1	Page No. 110 Onwards
	JL 2330 83	Spoiler Decal LH Upper - Red	1	
19a	JL 2331 16	Spoiler Decal RH Upper - Blue	1	Pls. Refer Kit List From
	JL 2331 00	Spoiler Decal RH Upper - White	1	Page No. 110 Onwards
	JL 2330 84	Spoiler Decal RH Upper - Red	1	
20	JL 2331 17	Spoiler Decal LH Lower - Blue	1	Pls. Refer Kit List From
	JL 2331 01	Spoiler Decal LH Lower - White	1	Page No. 110 Onwards
	JL 2330 85	Spoiler Decal LH Lower - Red	1	
20a	JL 2331 18	Spoiler Decal RH Lower - Blue	1	Pls. Refer Kit List From
	JL 2331 02	Spoiler Decal RH Lower - White	1	Page No. 110 Onwards
	JL 2330 86	Spoiler Decal RH Lower - Red	1	

FWD Front Wheel Direction

Plate No.: 39

Painted Parts and Decals

No.	Part No.	Description	Qty.	Remarks
21	JL 2331 23	Decal Fender LH - Blue	1	
	JL 2330 35	Decal Fender LH - Black	1	Pls. Refer Kit List From
	JL 2331 07	Decal Fender LH - White	1	Page No. 110 Onwards
	JL 2330 91	Decal Fender LH - Red	1	
22	JL 2331 24	Decal Fender RH - Blue	1	
	JL 2330 36	Decal Fender RH - Black	1	Pls. Refer Kit List From
	JL 2331 08	Decal Fender RH - White	1	Page No. 110 Onwards
	JL 2330 92	Decal Fender RH - Red	1	
23	36 JL00 53	Kit Dcl Tank Lower P- Red	1	N.I
	36 JL00 52	Kit Dcl Tank Lower S Blue	1	N.I
	36 JL00 68	Kit Dcl Tank Lower M White	1	N.I

FWD Front Wheel Direction

Plate No.: 39

Brand ID: 001MC629

Painted Parts and Decals (Old- up tp Oct. 2013_Refer Circular IB-82)

No.	Part No.	Description	Qty.	Remarks
1	JL 7401 5P	Tank Cover Top - Saffire Blue	1	
	JL 7401 5N	Tank Cover Top - Black	1	
	JL 7401 5Q	Tank Cover Top - Yellow	1	
	JL 7401 5M	Tank Cover Top - Red	1	
2	JL 7301 5P	Tank Cover Side LH - Saffire Blue	1	
	JL 7301 5N	Tank Cover Side LH - Black	1	
	JL 7301 5Q	Tank Cover Side LH - Yellow	1	
	JL 7301 5M	Tank Cover Side LH - Red	1	
3	JL 7302 5P	Tank Cover Side RH - Saffire Blue	1	
	JL 7302 5N	Tank Cover Side RH - Black	1	
	JL 7302 5Q	Tank Cover Side RH - Yellow	1	
	JL 7302 5M	Tank Cover Side RH - Red	1	
4	JL 7602 5P	Side Mask RH - Saffire Blue	1	
	JL 7602 5N	Side Mask RH - Black	1	
	JL 7602 5Q	Side Mask RH - Yellow	1	
	JL 7602 5M	Side Mask RH - Red	1	
5	JL 7601 5P	Side Mask LH - Saffire Blue	1	
	JL 7601 5N	Side Mask LH - Black	1	
	JL 7601 5Q	Side Mask LH - Yellow	1	
	JL 7601 5M	Side Mask LH - Red	1	
6	52 JL00 65	Front Fender - Blue	1	
	52 JL00 66	Front Fender - Black	1	
	52 JL00 67	Front Fender - Yellow	1	
	52 JL00 59	Front Fender - Red	1	
7	JL 7801 5P	Seat Cowl Assly - Blue	1	
	JL 7801 5N	Seat Cowl Assly - Black	1	
	JL 7801 5Q	Seat Cowl Assly - Yellow	1	
	JL 7801 5M	Seat Cowl Assly - Red	1	

FWD Front Wheel Direction

Plate No.: 39

Brand ID: 001MC629

Painted Parts and Decals (Old- up tp Oct. 2013_Refer Circular IB-82)

No.	Part No.	Description	Qty.	Remarks
8	52 JL00 54	Cover Side LH Assly	1	
9	52 JL00 55	Cover Side RH Assly	1	
10	JL 2330 04	3D Decal Tank RH	1	
11	JL 2330 03	3D Decal Tank LH	1	
12	JL 2330 02	'B' Logo	1	
13	36 JL00 26	Fairing Decal	1	
14	36 JL00 27	Fender Decal - Red	1	
	36 JL00 28	Fender Decal - Blue	1	
	36 JL00 29	Fender Decal - Black	1	
	36 JL00 30	Fender Decal - Yellow	1	
15	JL 2330 05	Decal Side Cover '4 Valve'	2	
16	JL 2330 06	Decal Seat Cowl '200 NS'	2	

FWD Front Wheel Direction

Plate No.: 40

Radiator Covers

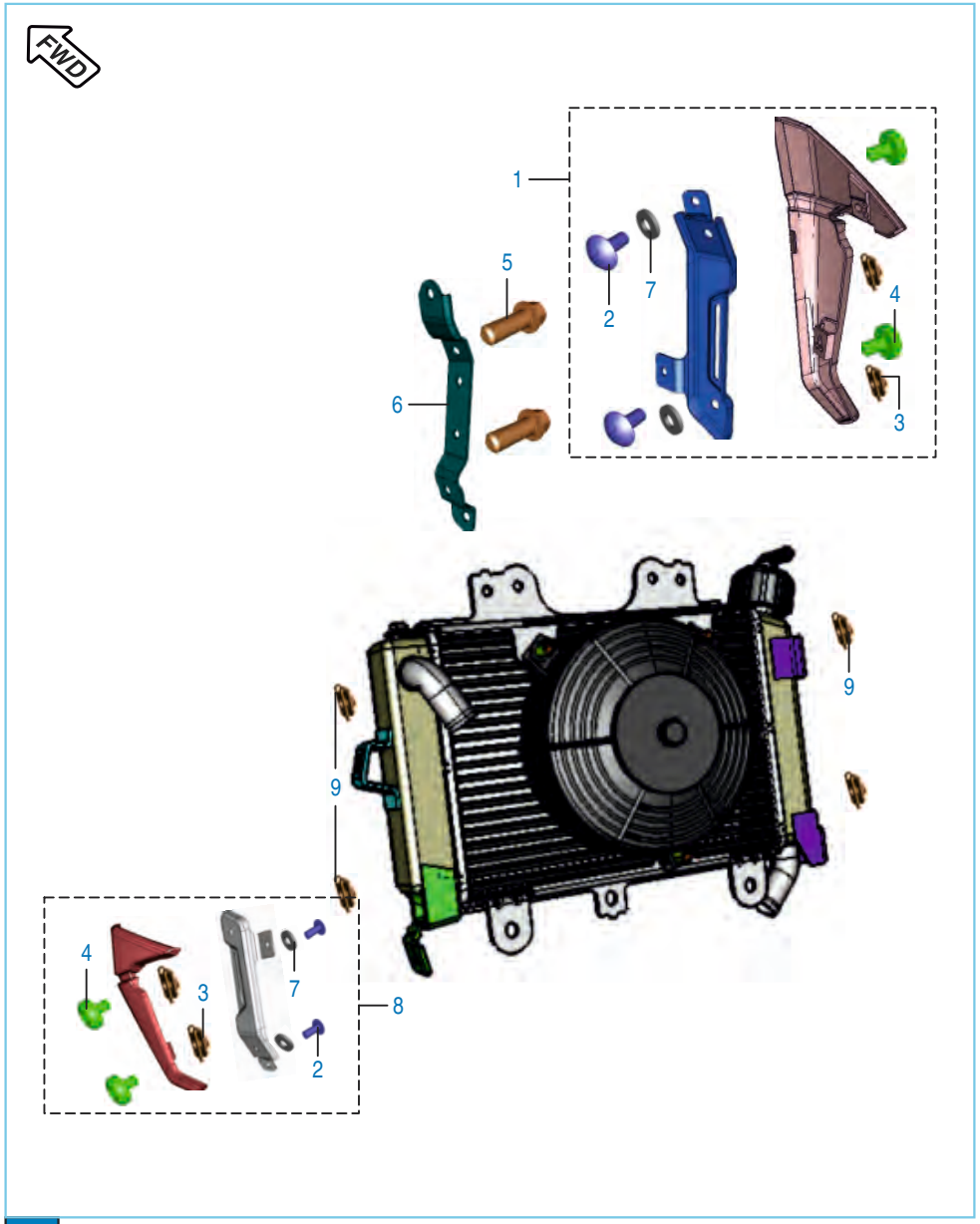

No.	Part No.	Description	Qty.	Remarks
1	JL 1812 29	Shroud Assy RH	1	
2	KB UB05 12	Screw Trus	4	
3	JW 1812 36	Clip Nut M5	4	
4	KB UA06 12	Screw - Truss	4	
5	39 1672 04	Bolt - Flange : M6 X 16	2	
6	JL 1812 32	Shroud Mtg Bkt RH	1	
7	39 2141 24	Washer (Non Metallic Round Washer)	4	
8	JL 1812 26	Shroud Assy LH	1	
9	DJ 1810 65	Clip Nut M5	4	

FWD Front Wheel Direction

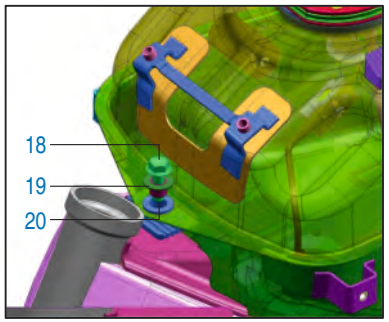

Front Mounting

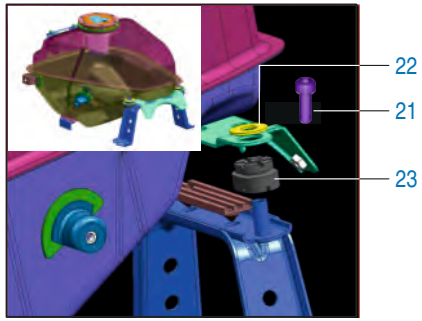

Rear Mounting

FWD **Front Wheel Direction**

Plate No.: 41

Brand ID: 001MC629

Petrol Tank, Cap Tank and Gauge Fuel

No.	Part No.	Description	Qty.	Remarks
1	JL 1710 44	Tank Assembly	1	
	JL 1710 81	Tank Assembly	1	from chs. MD2A36FZ2DCD99502
2	JL 1716 00	Cap Tank	1	
	56 JL04 01	Cap Tank (Moon Light Silver)	1	Ref. Cir. IB-82
3	39 2381 04	Bolt - Hexagon Socket Head Cap:M5	6	
4	JL 1710 49	Damper Ring Tank Cap	1	
5	36 JL00 12	Kit Tank Damper	1	
6	JL 4026 00	Sensor Fuel Level	1	
	JL 4026 02	Sensor Fuel Level	1	from chs. MD2A36FZ2DCD99502
6A	39 2758 21	'O' ring for Fuel Sensor	1	Alt. DK141028
7	39 2484 15	Nut - Flange :- M5	4	
8	JL 1710 37	Breather Tube	1	
9	JL 1710 63	Pipe - Drain	1	
10	JL 1718 02	Filter Inline	1	
11	JL 1710 36	Tube Fuel (Carburettor)	1	
12	JL 1710 35	Tube Fuel (Tank)	1	
13	JL 1718 00	Tap Fuel Assembly	1	
14	JL 1710 60	O Ring-For Knob	1	
15	JL 1718 03	Pin Snap For Knob	1	
16	JL 1718 01	Knob Fuel Tap	1	
17	DD 1410 22	Bolt - Flanged	2	Alt. DD141227
18	39 1946 04	Bolt Tank mtg Front	1	
19	JL 1710 19	Sleeve Tank Mtg Front	3	
20	JL 1710 18	Grommet Tank Mtg Front	1	
21	39 1943 04	Bolt	1	
22	39 1054 11	Washer Plain	2	
23	JL 1710 20	Grommet Tank Mtg Rear	2	
24	JL 1710 85	Spring Fuel Tube	1	w.e.f. Mar. 2013
25	JL 1710 96	Sealing Ring Fuel Cock	1	Alt. 30141039
26	JL 1710 73	Damper Tank Cover Resting Cover 1	for Top mtg fuel gauge Tank	(from chs. MD2A36FZ2DCD99502)

FWD Front Wheel Direction

Plate No.: 42

Brand ID: 001MC629

Fittings - Petrol Tank Cover, Side Covers & Cover Seat

No.	Part No.	Description	Qty.	Remarks
1	JL 1710 57	Damper	4	
2	JL 1710 23	Bracket Side Cover Mtg Rh	1	Before May 2014
	JL 1710 99	Bracket Side Cover Mtg Rh	1	For ch. No.MD2A36FZ7ECB5523 Ref. Cir IB-124
2A	JL 1710 22	Bracket Side Cover Mtg LH	1	
3	39 2060 04	Bolt - Flanged	2	
4	DJ 1612 29	Clip Nut	16	
5	JL 1710 24	Damper Structure Mtg	2	
6	JL 1710 48	Tank Cover Central	1	
7	39 1778 02	Screw - Tapping : 4 X 14	12	
8	39 1907 01	Screw - Truss Cross : M5	8	
9	39 2141 24	Washer (Non Metalic Round Washer) 8		
10	LA C000 22	Bolt Socket-Special Head	4	
11	31 1610 78	Washer	4	
12	DS 1410 12	Grommet Side Cover	4	
13	39 1781 01	Screw	4	
14	59 0200 01	Screw Self Tapping 3.5X9.5	5	
15	JL 1710 62	Cover Mesh Rh	1	N.S
16	JL 1710 61	Cover Mesh LH	1	N.S
17	59 0400 14	Bolt Flanged M6X1	4	
17A	39 1943 04	Bolt - Flanged	2	
18	39 0722 11	Washer	2	
19	39 0239 11	Washer	2	
20	39 1076 01	Screw - M6	2	
21	DL 1610 15	Grommet	2	
22	JL 1812 19	Grommet	2	
23	JL 1812 14	Seal cowl inner	1	
24	LD A000 07	Washer Plain Small	4	
25	39 1776 02	Screw	4	
26	39 1197 04	Bolt - Socket :- M6	2	
27	39 0239 11	Washer	8	
28	JL 1710 70	Rubber Grommet	8	
29	JL 1710 71	Tank Cover Mtg Sleeve	8	
30	LA C000 34	Bolt M6 X 20	2	
31	36 JL00 31	Kit Tank Mtg Hardware	1	
32	JL 1812 11	Mesh Cover LH	1	
33	JL 1812 12	Mesh Cover RH	1	
34	JL 1710 78	Pad Tank Cover	1	Ref. Cir. IB-82

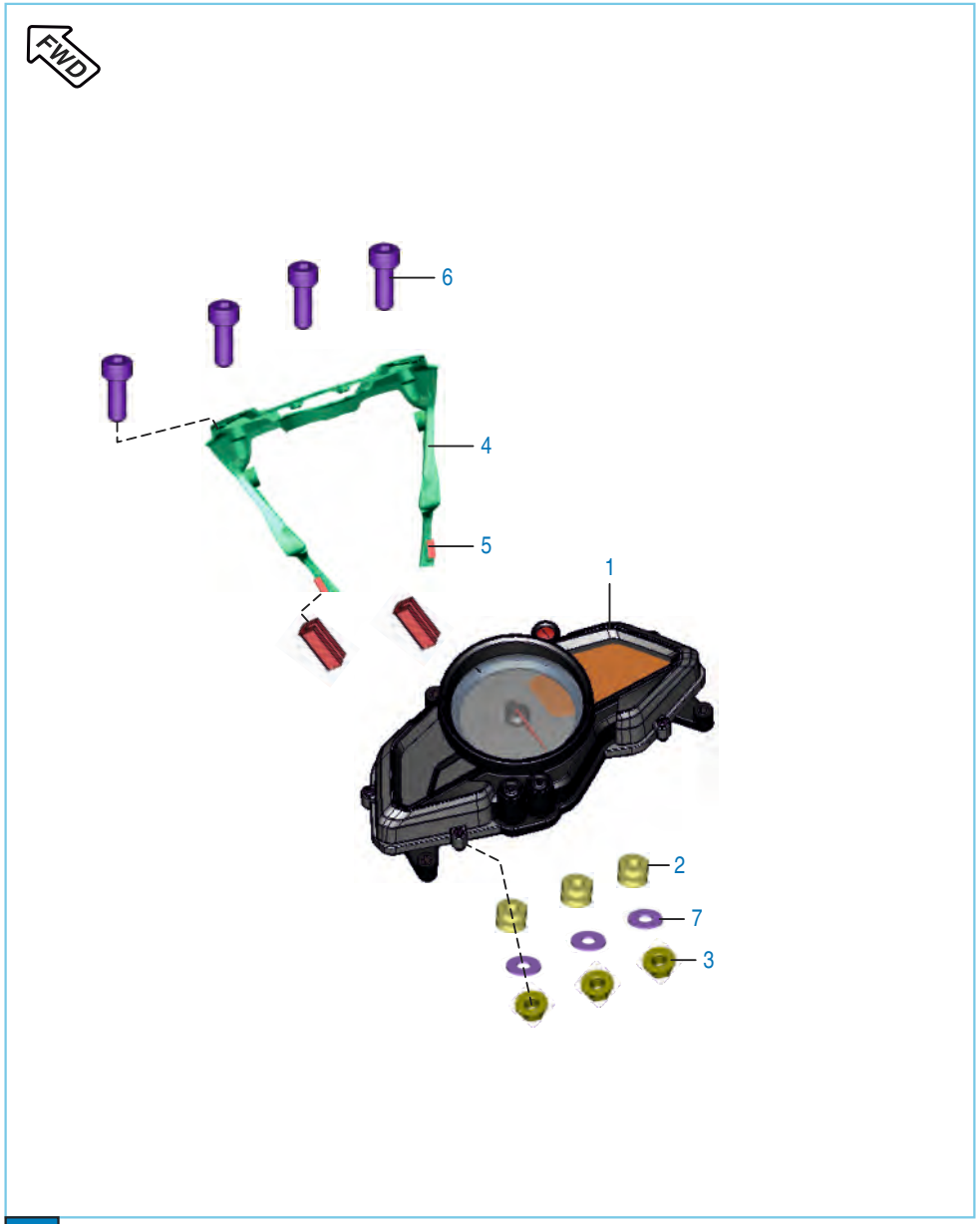

Front Wheel Direction

Plate No.: 43

Brand ID: 001MC629

Meter Assembly

No.	Part No.	Description	Qty.	Remarks
1	JL 4024 00	Speedometer Assembly	1	
	JI 4024 05	Speedometer Assembly	1	Ref. Cir. IB-74
2	JG 1812 38	Grommet Dashboard	3	
3	39 0291 15	Nut - Hexagon :- M5 X 0.8	3	
4	JL 1812 41	Assembly Speedo Flap	1	
5	JB 1812 23	Beading Speedo Flap	2	
6	KA CB05 14	Bolt-Socket-Kac St-B Dia-05 L-14	4	
7	LD B000 07	Washer Plain	3	
8	JL 4024 03	Speedometer Harness	1	N.I.

Plate No.: 44

Control Cables

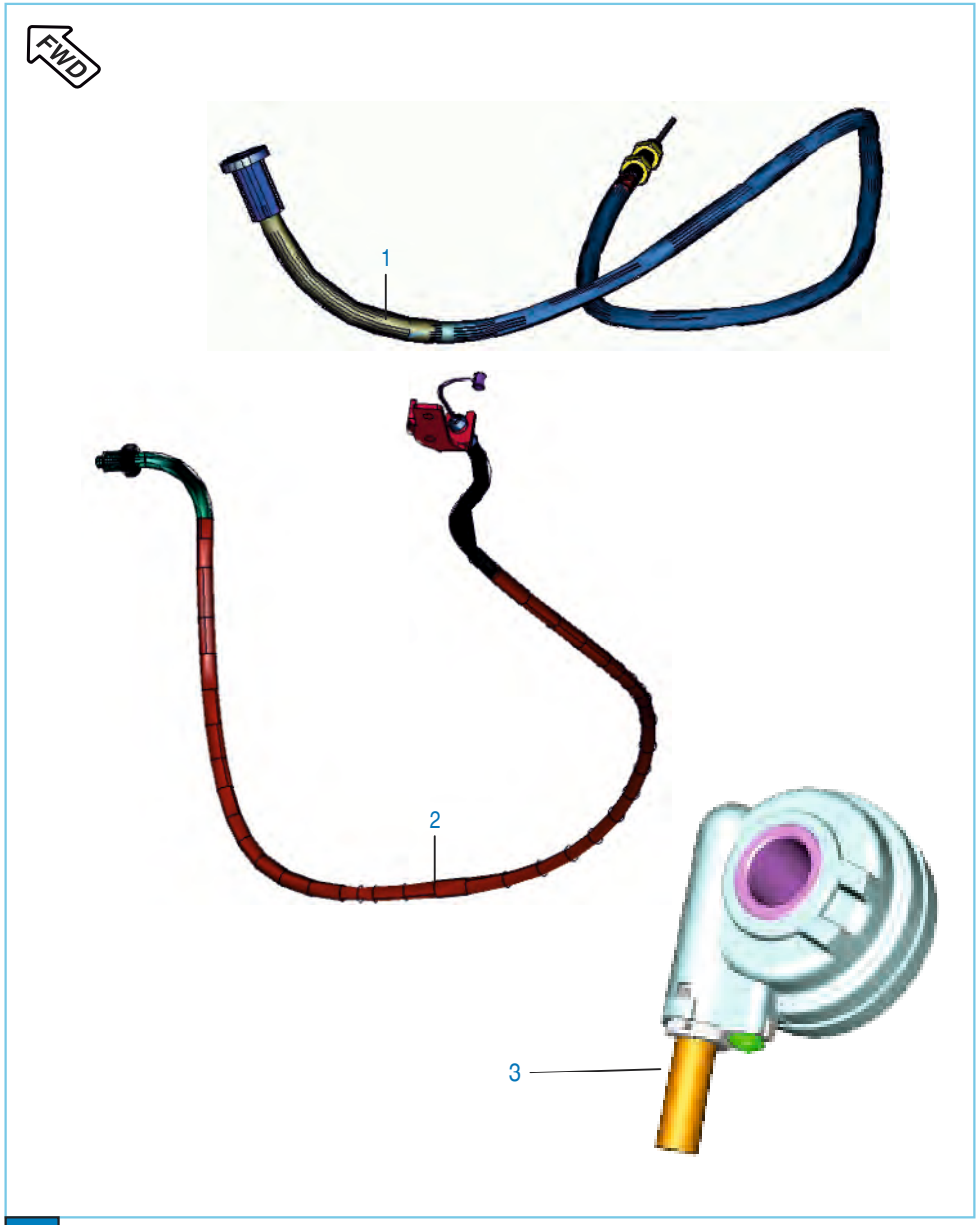

No.	Part No.	Description	Qty.	Remarks
1	JL 1612 01	Cable Throttle	1	
2	JL 1612 00	Cable Clutch	1	
3	JC 1510 19	Speed Sensor Assly.	1	

FWD Front Wheel Direction

Plate No.: 45

Brand ID: 001MC629

Chain Case

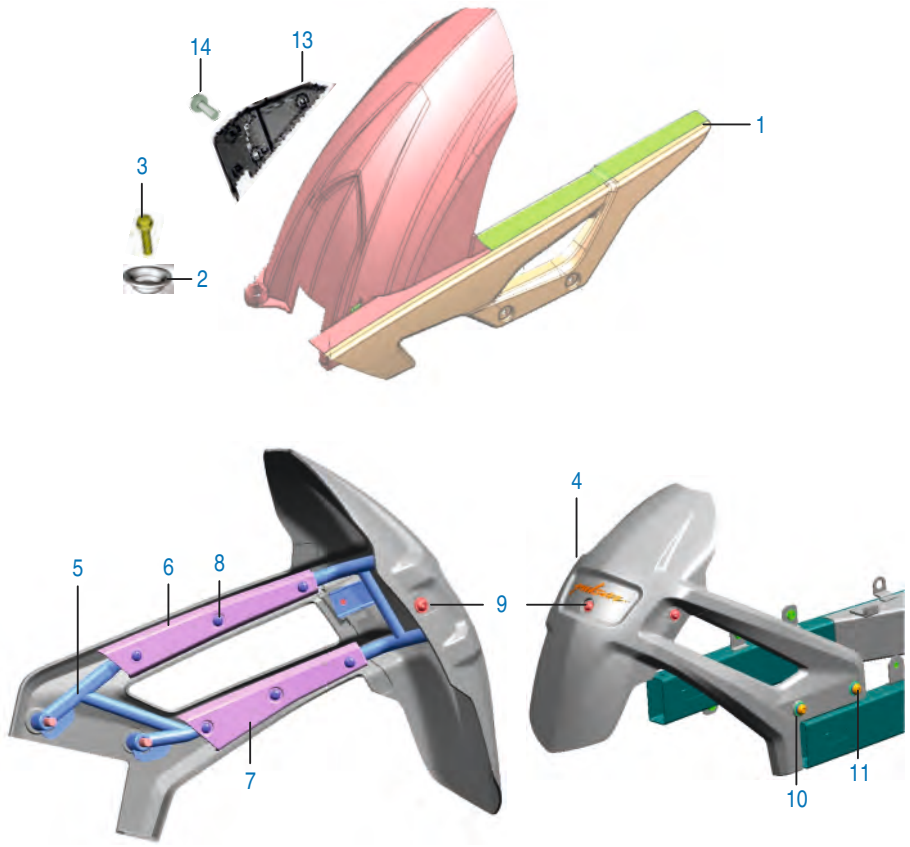

No.	Part No.	Description	Qty.	Remarks
1	JL 1812 05	Cover Assly Chain	1	
2	JG 1220 28	Extruded Washer	2	
3	39 1791 04	Bolt Flanged M6X8	2	
4	JL 1814 09	Asly Hugger Rear	1	
5	JL 1810 06	Tube Rear Hugger Mtg	1	
6	JL 1814 07	Cover 1- Hugger Rear	1	
7	JL 1814 08	Cover 2- Hugger Rear	1	
8	KB UB04 10	Screw	6	
9	LA C000 37	Bolt Soc-special Head	3	
10	39 0265 12	Spring Washer	2	
11	LA C000 54	Bolt Special Socket	2	
12	JL1814 10	Collar Hugger Rear	2	
13	JL 1812 53	Chain Cover RH Side	1	
14	LA C000 08	Bolt Socket Head	2	

FWD Front Wheel Direction

Plate No.: 46

Brand ID: 001MC629

Head Lamp & Fairing

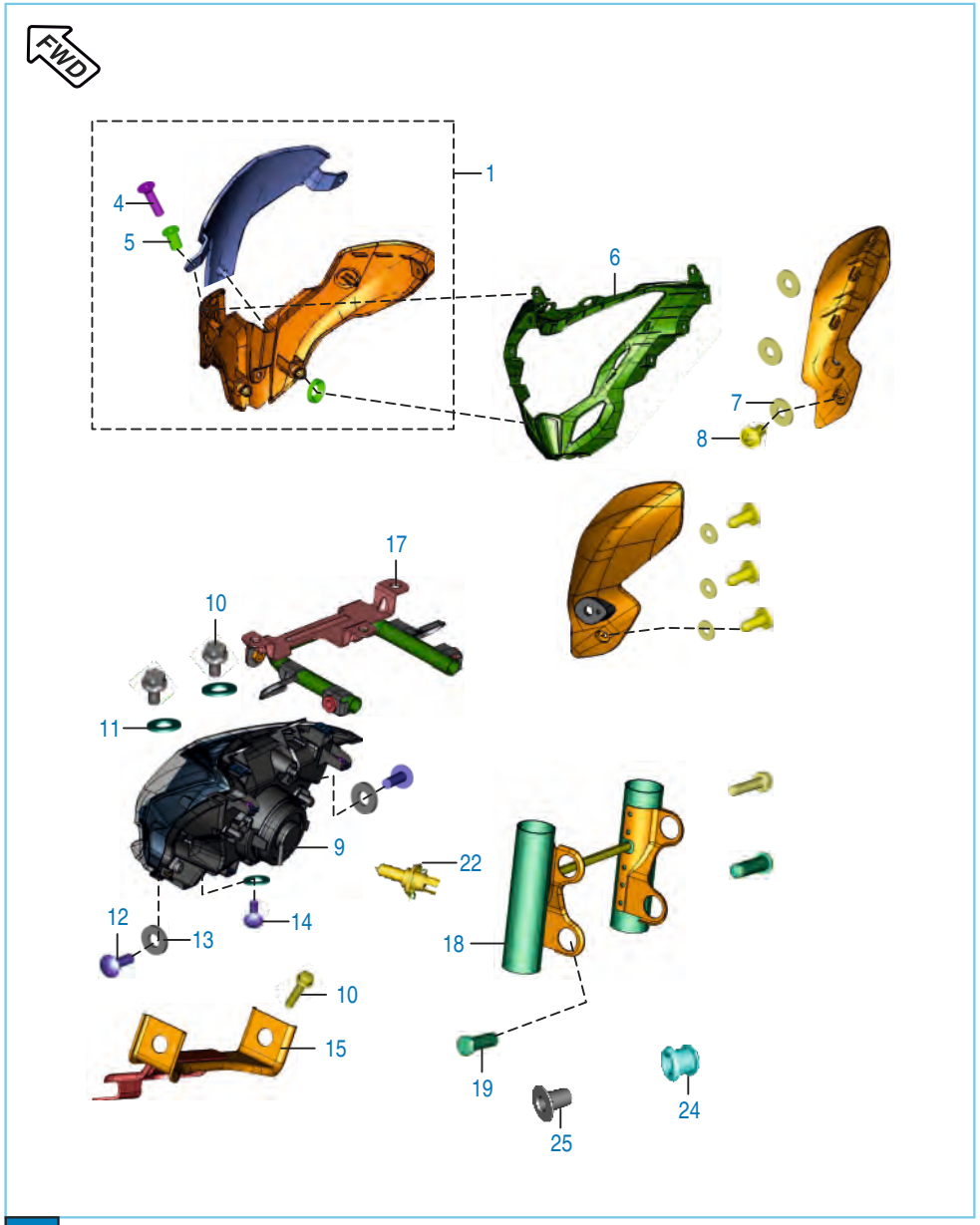

No.	Part No.	Description	Qty.	Remarks
1	JL 1810 08	Windshield Assembly	1	
2	JG 1812 36	Well Nut - M5 X 16 L	2	N.I.
3	JG 1812 35	Washer Special	2	N.I.
4	LB S000 01	Screw M5X20Lx4.8	2	
5	JL 1812 47	Grommet Wind Screen Mounting	2	
6	JL 1812 03	Fairing	1	
7	LD A000 07	Washer Plain Small	6	
8	LB R000 02	Self Tapping Screw - Dia 5	6	
9	JL 4010 12	Head Lamp Assy	1	
10	39 1943 04	Bolt - Flanged	2	
11	39 0198 11	Washer - Plain	3	
12	KB UC05 16	Screw - Truss - M5 X 16L, 4.8	2	Alt. LBU00009
13	39 2141 24	Washer (Non Metalic Round Washer)	2	
14	39 1781 01	Round Head Screw	1	
15	JL 1812 36	Bracket Lower Mtg	1	
16	JL 1812 49	Damper Head Lamp	1	N.I.
17	JL 1812 37	Bracket Upper Mtg	1	
18	JL 1812 35	Lamp Shade assly.	1	
19	KA Cb08 35	Bolt Pivot Mass Carrier	4	
20	36 JL00 17	Kit Wind Shield Mtg	1	
21	DH 1910 37	Bulb Pilot 12V 3W	2	N.I.
22	EC 4010 30	Head Lamp Bulb 60/55W (H4)	1	
23	YJ L020 06	Head Lamp Wiring Harness	1	Rinder Make N.I
24	PA 1812 92	Grommet Fairing	4	
25	PA 1812 93	Collar Fairing Mtg	4	

FWD Front Wheel Direction

Plate No.: 47

Indicator Light Assembly

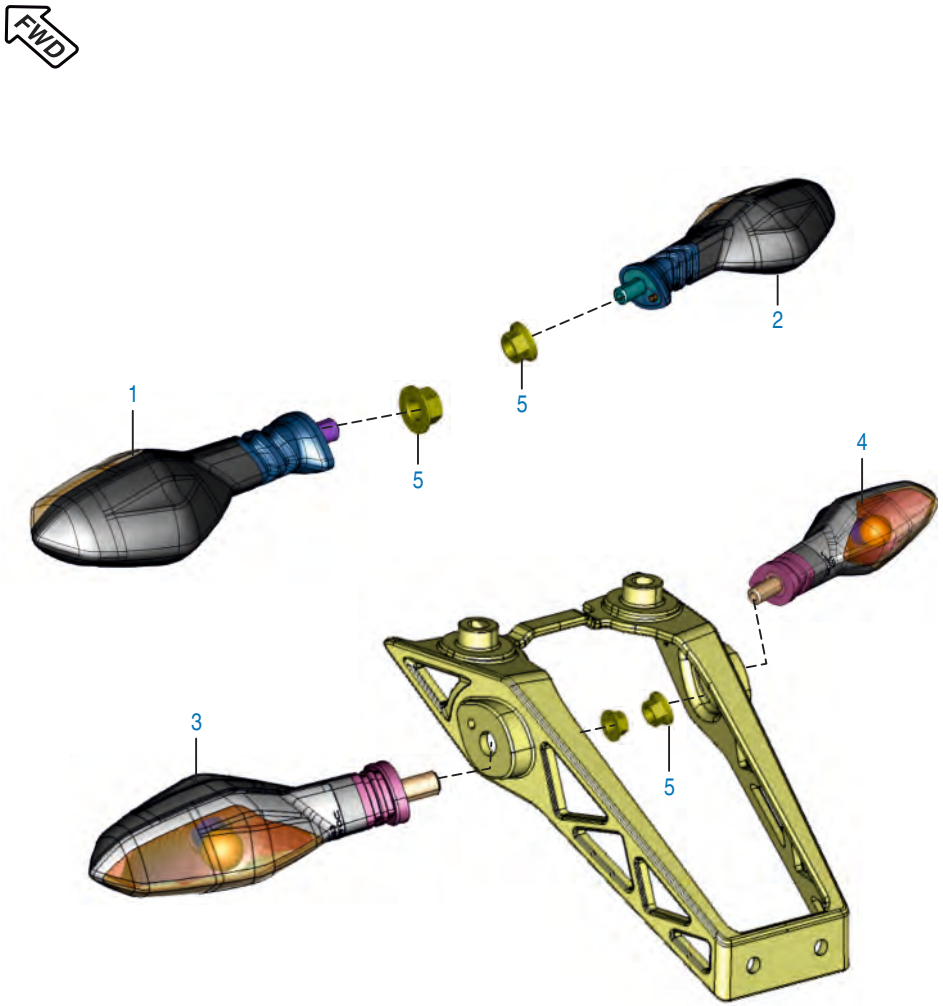

No.	Part No.	Description	Qty.	Remarks
1	JL 4010 05	Indicator Assy FR LH	1	
2	JL 4010 06	Indicator Assy FR RH	1	
3	JL 4010 03	Indicator Assy RR LH	1	
4	JL 4010 04	Indicator Assy RR RH	1	
5	39 1225 15	Nut - Hexagon With Flange : M10	4	

FWD Front Wheel Direction

FWD Front Wheel Direction

Plate No.: 48

Brand ID: 001MC629

Tail Lamp Assly / Front Number Plate

No.	Part No.	Description	Qty.	Remarks
1	LB U000 09	Screw Mashroom Head	2	
2	39 2141 24	Washer None Metallic	2	
3	JU 2328 00	Front Number Plate	1	
4	LC A000 08	Flange Nut	2	
5	KA CB08 25	Bolt Socket	2	39176904
6	JL 2328 05	Bracket Number Plate Mtg	1	
7	JL 4010 02	Lamp Tail Assly	1	
8	39 1907 01	Screw - Truss Cross : M5	3	
9	JL 1138 00	Bracket Rear Blinker Mtg	1	
	56 JL02 3G	Bracket Rear Blinker Mtg (MLT Silver)	1	Ref. Cir. IB-82
10	39 1681 04	Bolt M-6	2	
11	JD 4010 07	Rear Number Plate Lamp	1	
12	DD 2010 02	Reflector - Reflex	1	
13	JL 1138 03	Bracket -Reflector Reflex Mtg	1	
14	39 0705 01	Screw - M5	2	
15	39 1972 15	Nut	1	
16	DP 1611 45	Rear Number Plate	1	
17	39 2476 04	Bolt - Hexagon Head With Flange:M6	2	
18	DJ 1612 29	Nut Clip	3	
19	PA 4022 04	Band (Length 110Mm)	2	N.I.
20	JD 4010 23	Cover Number Plate Lamp	1	
21	JL 2328 08	Bracket - RR Number Plate MTG	1	

Plate No.: 49

Brand ID: 001MC629

Electrical Equipments

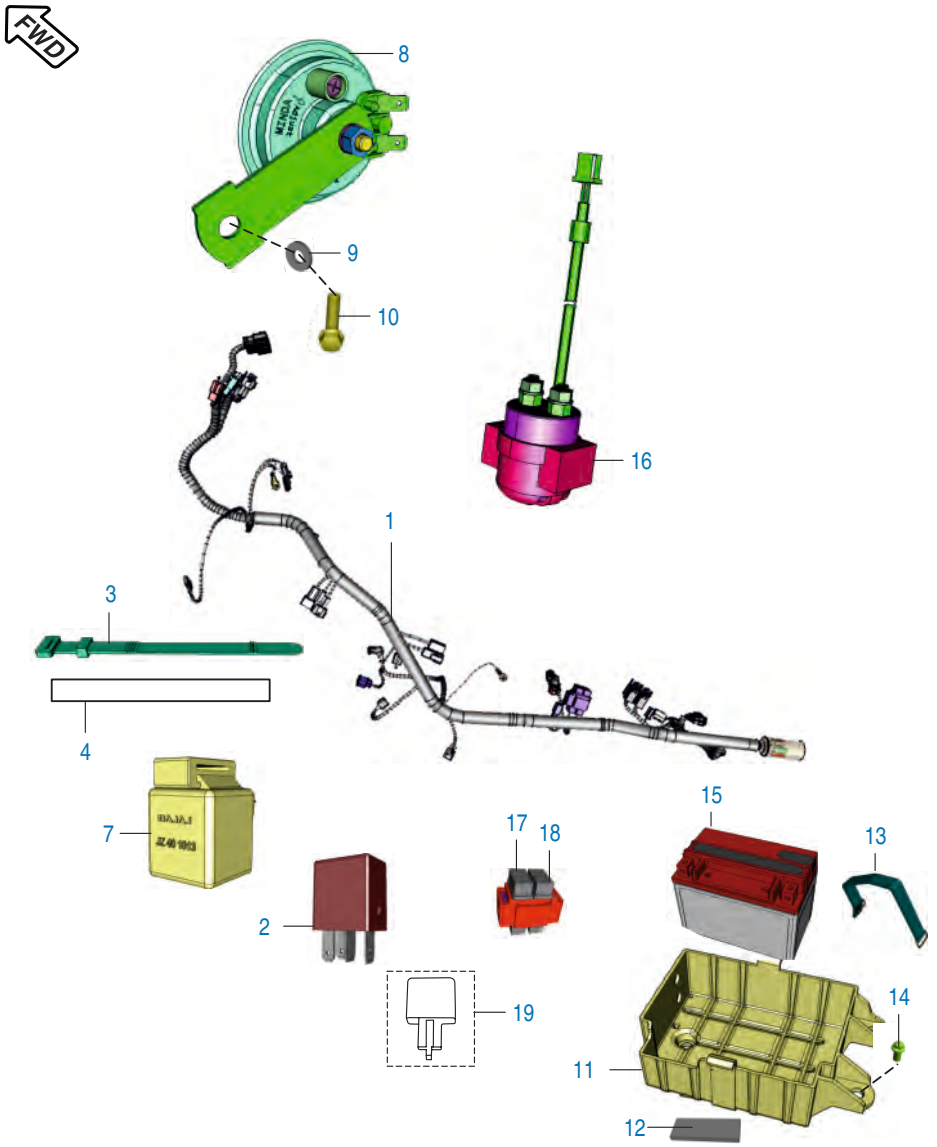

No.	Part No.	Description	Qty.	Remarks
1	JL 4022 03	Harness Wiring	1	
2	JL 4030 00	Relay Inter lock	1	
3	30 1910 48	Band	5	
4	30 2010 64	Band	3	
5	JL 4022 01	Cable Assy Relay To Motor	1	N.I.
6	JL 4022 02	Cable Earth	1	N.I.
7	JZ 4010 13	Headlamp Control Unit (Ve Model)	1	
8	JG 4016 01	Horn	1	
9	39 1507 11	Washer - Plain	1	
10	39 2205 04	Hex Head Bolt - Flanged M8	1	
11	JL 1812 18	Battery Case	1	
12	JL 4018 03	Foam Bottom Battery 6 & 8Ah	11	
13	JL 4018 01	Battery Band	1	
14	39 1944 04	Bolt - Flanged	4	
15	JU 4018 03	12V 8Ah Vrla Battery W/o acid Bottle	1	
15a	JU 4018 02	Acid Bottle	1	
16	JN 3516 04	Starter Relay- With Grommet	1	N.S
17	JL 4022 08	Fuse - 20A (Blade Type)	2	N.I.
18	AP 2010 25	Fuse 15A (Blade Type)	2	N.I.
19	DS 2010 25	Flasher - D. C. :- Solid State	1	

FWD Front Wheel Direction

Plate No.: 50

Tool Kit

No.	Part No.	Description	Qty.	Remarks
1	DJ 2210 19	Tool Kit	1	
2	DK 2210 24	Band Tool Kit	2	

Front Wheel Direction

Plate No.: 51

Brand ID: 001MC629

Accessories / Grab Handle

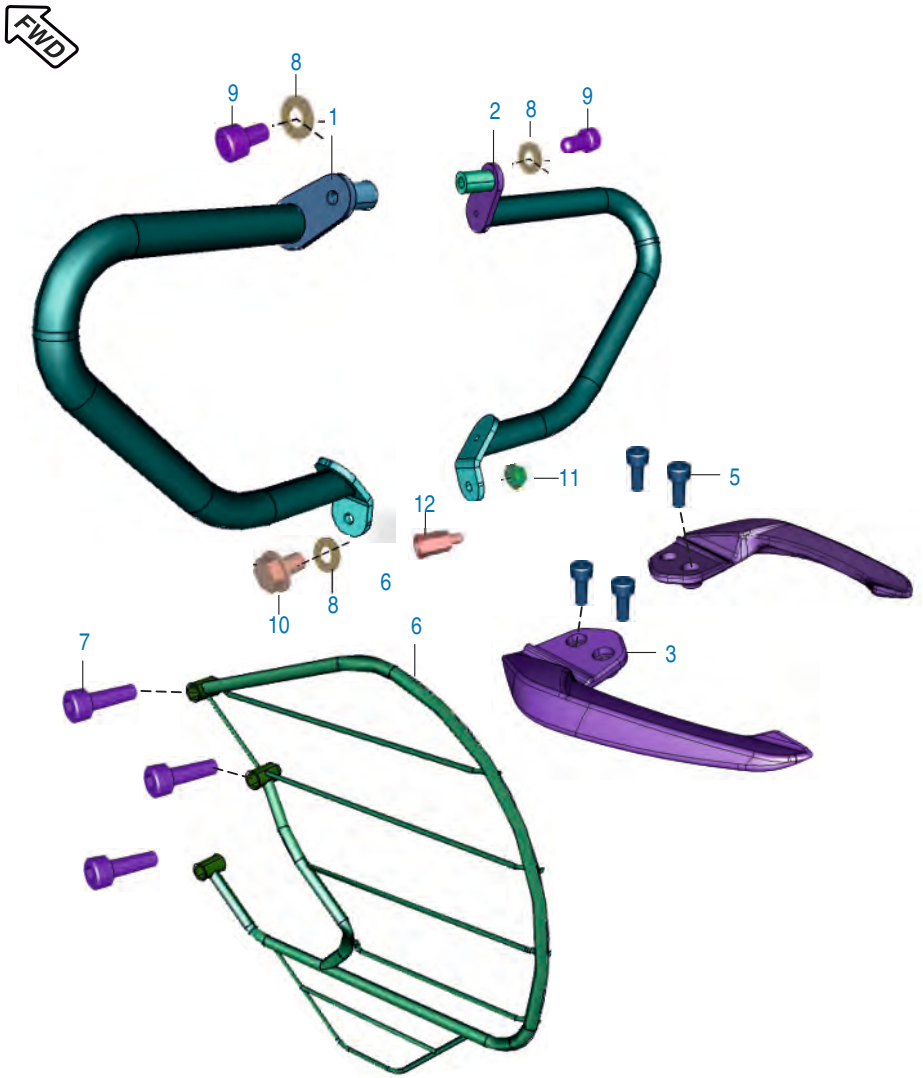

No.	Part No.	Description	Qty.	Remarks
1	JL 2312 01	Guard Leg LH	1	
2	JL 2312 03	Guard Leg Guard Rh	1	
2A	LA C000 29	Bolt Socket Head	1	
3	JL 2314 04	Grab Handle Assy Lh	1	
4	JL 2314 05	Grab Handle Assy Rh	1	
5	LA C000 17	Bolt Socket M8 X 1.25	4	
6	JL 2312 02	Guard Saree	1	
7	KA Cb06 22	Bolt Socket L-22	3	
8	KD BE06 13	Washer	4	
9	KA CA06 35	Bolt Socket	2	
10	LA D000 40	Bolt Flanged M6-6L	1	
11	JU 2312 07	Nut Nylock M8 x 1.25	1	
12	JU 2312 05	Nut Leg Guard Mounting	1	

FWD Front Wheel Direction

Sr No	Kit Part No.	Kit Description	Consisting of Following Parts		
			Part No.	Description	Qty/Kit
1.	36JL0005	Kit Primary Drive+driven-P200	JG551216 JU551405	Gear Primary Drive 22T Housing Clutch Assy Comp	1 1
2.	36JL0009	Kit Chain Sprocket-P200	DV101048 JL141000 JL131228	Sprocket Output (14T) Chain Sprocket 39T	1 1 1
3.	36JL0011	Kit Valve Repaire-P200	39201719 JF511215 JF511217 JF511214 DG101029	Seal - Oil Seat Valve Spring Valve Spring Retainer Valve Spring Collet	1 1 1 1 2
4.	36JL0012	Kit Tank Damper-P200	JL171028 JL171029 JL171030 JL171031 JL171032 JL171038	Damper Tank Cover Fr LH Damper Tank Cover Fr RH Damper Tank Cover Center LH Damper Tank Cover Center RH Damper Tank Cover Rear Beading Tank LH	1 1 1 1 1 1
5.	36JL0013	Kit Seat Damper-P200	JL191007 DK211007	Damper For Seat Damper Seat Front	6 1
6.	36JL0014	Kit Engine Gasket-P200	JL541207 JL541208 JL521002 JL511022 JG541041 CS101128 JL511001 JG591070	Gasket Clutch Cover Gasket Magneto Cover Gasket Cylinder Block Gasket Cylinder Head Gasket Crankcase Gasket Gasket Head Cover(rubber) Gasket Exhaust	1 1 1 1 1 1 1 1
7.	36JL0003	Kit Assly C'case LH-P200	JL541009 JC101077 JG541021 JG541015 39256220 JG541020	Crankcase LH Black Plug Taper Oil Nozzle Needle Bearing HK 1514 RS Bearing - Needle Roller Jet Oil Crankcase RH	1 2 1 1 1 1

Sr No	Kit Part No.	Kit Description	Consisting of Following Parts		
			Part No.	Description	Qty/Kit
8.	36JL0004	Assly C' Case RH-P200	JL541010 BA102003 39256220 JL541008	Crankcase RH Black Plug - Oil Hole Bearing - Needle Roller Pipe Breather Crankcase	1 3 1 1
9.	36JL0007	Block & Piston-P200	JL521200 JL521004	Piston Assly Compl Cylinder Block With Pipe Breather	1 1
10.	36JL0010	Assly Cyl Head-P200	JL511019 39128321 JG511046	Cylinder Head Ring - O Stud (M8*1.25)	1 1 2
11.	36JL0001	Chain Guide-P200	JL531004 JL531005	Guide Chain (Slack Side) Guide Chain (Tight Side)	1 1
12.	36JL0002	Asly Cl Cover-P200	JL541206 JC101077 JL541218 JG541021 39199020	Clutch Cover P2011 Plug Taper Jet Oil Cover Clutch Oil Nozzle Bearing - Needle	1 1 1 2 1
13.	36JU0001	Piston Ring-P200	JU521206 JU521207 JU521208	Ring Piston Top Ring Piston Second Ring Piston Oil	1 1 1
14.	36JU0002	Friction Plate-P200	JG551448 JG551455	Friction Disk A Disc C-Clutch Friction	5 1
15.	36JL0015	Pillion Hardware-P200	JD113019 30141031 39104011 39078408	Pin Foot Step Ring - O Washer - Plain Pin - Split	1 1 1 1
16.	36JL0016	S Cowl Grommet-P200	JL181219 JL181220 DL161015	Grommet -1 Seat Cowl Grommet -2 Seat Cowl Grommet	2 2 2

Sr No	Kit Part No.	Kit Description	Consisting of Following Parts		
			Part No.	Description	Qty/Kit
17.	36JL0017	Wind Shield MtG-P200	01160508	Washer Lock	3
			JG181236	Well Nut - M5 X 16 L	2
			JG181235	Washer Special	2
			JL181247	Grommet Wind Screen Mounting	2
			JL171057	Damper -Tank Side cover	2
			DS141012	Grommet Side Cover Front	4
18.	36JL0019	Jet P200	-- ---- --	Jet Needle	1
			-- ---- --	Needle Jet	1
			-- ---- --	Je Holder	1
			-- ---- --	Main Jet	1
			DK121063	Pilot Jet	1
19.	36JL0020	VC Screw P200	-- ---- --	Screw Adjuster VC	1
			DH121130	O- Ring Screw VC	1
			DH121086	Spring Screw VC	1
			DH121087	Plain Washer	1
			DH121088	O- Ring Screw VC	1
20.	36JL0021	Idling Screw P200	-- ---- --	Screw Idling Adjustment	1
			DH121163	Plain Washer	1
			DH121077	Spring	1
21.	36JL0022	Piston Valve P200	-- ---- --	Vacuum Piston Compl.	1
			DK121055	Diapragm	1
			DK121054	Spring	1
22.	36JL0023	Gasket / 'O' ring P200	DK121058	O-Ring / Gasket Float Chamber	1
			DH121118	O-Ring - Drain Screw	1
			DH121088	O-Ring - VC Screw	1
			DH121130	O-Ring - VC Screw	1
23.	36JL0024	Jet Needle Hardware P200	DD121056	Holder For Jet Needle	1
			DD121050	Spring-Jet Needle	1
			DD121052	Washer-Jet Needle	1
			Dd121054	E-Clip	1

Sr No	Kit Part No.	Kit Description	Consisting of Following Parts		
			Part No.	Description	Qty/Kit
24.	36JL0031	Kit Tank Mtg Hardware	JL171070	Tank Cover Grommet	4
			JL171071	Tank Coover Mtg Sleeve	4
			39023911	Washer - Plain	4
			LAC00034	Bolt M6 X 20	2
25	36JL0021	Kit Idling Screw	– ----- –	Screw Idling Adjustment	1
			DH121163	Plain Washer	1
			DH121077	Spring	1
26	36JL0026	Kit Fairing Decal - Black	JI233000	Decal Fairing LH	1
			JI233001	Decal Fairing RH	1
27	36JL0049	Kit Dcl Fairing-P Red	JI233077	Fairing Upper Decal LH	1
			JI233078	Fairing Upper Decal RH	1
			JI233079	Fairing Lower Decal LH	1
			JI233080	Fairing Lower Decal RH	1
28	36JL0063	Kit Dcl Fairing-M White	JI233093	Fairing Upper Decal LH	1
			JI233094	Fairing Upper Decal RH	1
			JI233095	Fairing Lower Decal LH	1
			JI233096	Fairing Lower Decal RH	1
29	36JL0048	Kit Dcl Fairing-S Blue	JI233109	Fairing Upper Decal LH	1
			JI233110	Fairing Upper Decal RH	1
			JI233111	Fairing Lower Decal LH	1
			JI233112	Fairing Lower Decal RH	1
30	36JL0064	Kit Dcl Fender-E Black	JI233035	Fender Decal LH	1
			JI233036	Fender Decal RH	1
31	36JL0061	Kit Dcl Fender-P Red	JI233091	Decal Fender LH	1
			JI233092	Decal Fender RH	1
32	36JL0065	Kit Dcl Fender-M White	JI233107	Decal Fender LH	1
			JI233108	Decal Fender RH	1

Sr No	Kit Part No.	Kit Description	Consisting of Following Parts		
			Part No.	Description	Qty/Kit
33	36JL0060	Kit Dcl Fender-S Blue	JI233123 JI233124	Decal Fender LH Decal Fender RH	1 1
34	36JL0058	Kit Dcl S Cowl-P Red	JI233087 JI233088 JI233089 JI233090	Seat Cowl Upper Decal LH Seat Cowl Upper Decal RH Seat Cowl Lower Decal LH Seat Cowl Lower Decal RH	1 1 1 1
35	36JL0066	Kit Dcl S Cowl-M White	JI233103 JI233104 JI233105 JI233106	Seat Cowl Upper Decal LH Seat Cowl Upper Decal RH Seat Cowl Lower Decal LH Seat Cowl Lower Decal RH	1 1 1 1
36	36JL0057	Kit Dcl S Cowl-S Blue	JI233119 JI233120 JI233121 JI233122	Seat Cowl Upper Decal LH Seat Cowl Upper Decal RH Seat Cowl Lower Decal LH Seat Cowl Lower Decal RH	1 1 1 1
37	36JL0054	Kit Dcl Spoiler-P Red	JI233083 JI233084 JI233085 JI233086	Spoiler Upper Decal LH Spoiler Upper Decal RH Spoiler Lower Decal LH Spoiler Lower Decal RH	1 1 1 1
38	36JL0067	Kit Dcl Spoiler-M White	JI233099 JI233100 JI233101 JI233102	Spoiler Upper Decal LH Spoiler Upper Decal RH Spoiler Lower Decal LH Spoiler Lower Decal RH	1 1 1 1
40	36JL0055	Kit Dcl Spoiler-S Blue	JI233115 JI233116 JI233117 JI233118	Spoiler Upper Decal LH Spoiler Upper Decal RH Spoiler Lower Decal LH Spoiler Lower Decal RH	1 1 1 1
41	36JL0053	Kit Dcl Tank Lower-P Red	JI233081 JI233082	Tank Lower Decal LH Tank Lower Decal RH	1 1

Sr No	Kit Part No.	Kit Description	Consisting of Following Parts		
			Part No.	Description	Qty/Kit
42	36JL0068	Kit Dcl Tank Lower-M White	JI233097 JI233098	Tank Lower Decal LH Tank Lower Decal RH	1 1
43	36JL0052	Kit Dcl Tank Lower-S Blue	JI233113 JI233114	Tank Lower Decal LH Tank Lower Decal RH	1 1

Amendment Sheet

Page no.	Fig. no.	Old part no.	New part no.	Description	Updation date	Remarks
54	24	N/A	36JL0041	Kit Main Step Hardware	16.08.13	Correction (mail dated:16.08.13)
86	1	N/A	JL171081	Tank Assly	03.10.13	Ref. Cirular IB-73
86	6	N/A	JL402602	Sensor Fuel Level	03.10.13	Ref. Cirular IB-73
86	25	JL171096	30141039	Sealing Ring	03.10.13	Alternate
86	26	N/A	Jl171073	Damper Tank	03.10.13	Ref. Cirular IB-73
42	8	LDB00010	39216511	Plain Washer	25.10.13	Correction
42	9	LAD00055	Dh101396	Bol Hex	25.10.13	Correction
42	10	Dk101595	Jg351019	Body Comp. St. Clutch	25.10.13	Correction
42	11	Dk101163	Jy551402	Clutch One way Assly.	25.10.13	Correction
42	12	Dk101596	N/A	Spring St. Clutch	25.10.13	Deleted (Correction)
42	12	N/A	39084914	Toothed Lock Washer	25.10.13	New part added (Correction)
42	13	DK101605	N/A	Plate Roller Clutch	25.10.13	Deleted (Correction)
42	13	N/A	DH101389	Pre-coated screw	25.10.13	New part added (Correction)
42	13	DK101605	N/A	Plate Roller Clutch	25.10.13	Deleted (Correction)
42	13	N/A	DH101389	Pre-coated screw	25.10.13	New part added (Correction)
42	14	DK101382	N/A	Pre-coated screw	25.10.13	Deleted (Correction)
42	15					Shifted to Sr. No. 12
42	16	59100002	N/A	Spring Dowel	25.10.13	Deleted (Correction)
42	17					Shifted to Sr. No. 14
43	21		JL232808	Bracket-RR No. Plate	12.03.14	Added new part
90	1	JL402400	JL402405	Speedometer	19.03.14	Deleted (Correction)
4	72	N/A	JL5110294	Cover Thermostat	20.03.14	New part added (Correction)
24	12	JG601011	JL601005	Cover Water Pump	27.03.14	Deleted (Correction)
28	16	Jg601400	Jg601237	Radiator Fan	20.06.14	Alternate added

Amendment Sheet

Page no.	Fig. no.	Old part no.	New part no.	Description	Updation date	Remarks
22	20	--------	Jg541074	Oil Nozzle	09.07.14	New Part Added (Correction)
28	21	JL601209	JL601235	Expansion Tank Assy	17.09.14	Ref. Cir. IB-124
28	25	JL601214	–	Hose-Exp. tank top	17.09.14	Ref. Cir. IB-124
88	2	Jl171023	Jl171099	Brkt Side Cvr mtg. RH	17.09.14	Ref. Cir. IB-124

Part Number	Figure No.	Page No.
28121008	5	26
30101195	3	32
30191038	14	70
30191048	3	102
30201064	4	102
31101173	7	12
31161078	11	88
31201079	5	72
36DH1902	4	64
36JG0011	7	50
36JL0001	15	8
36JL0002	1	30
36JL0003	1	22
36JL0004	2	20
36JL0005	3	34
36JL0007	1	10
36JL0008	6	34
36JL0009	2	68
36JL0010	4	4
36JL0011	10	6
36JL0012	5	86
36JL0013	2	46
36JL0017	20	96
36JL0019	5	36
36JL0020	6	36
36JL0021	7	36
36JL0022	8	36
36JL0023	10	36
36JL0024	9	36
36JL0025	1	58
36JL0031	31	88

Part Number	Figure No.	Page No.
36JU0001	2	10
36JU0002	6	34
39019811	15	70
39019811	11	96
39023911	17	56
39023911	19	88
39023911	27	88
39024211	9	56
39026512	10	94
39029115	3	90
39032615	11	56
39042215	11	58
39045411	11	52
39055302	12	52
39070501	14	100
39073212	28	28
39072211	18	88
39074601	21	20
39080808	6	18
39080808	16	70
39084001	13	62
39084914	15	42
39090012	12	62
39098308	21	86
39099906	6	26
39099906	11	30
39099906	4	32
39104119	10	30
39104319	8	22
39104619	15	30
39105315	19	52

Part Number	Figure No.	Page No.
39105411	22	86
39106204	9	48
39107601	20	88
39118011	3	74
39119704	18	88
39119704	26	88
39122515	5	98
39128321	9	4
39150711	9	102
39155104	27	28
39166511	15	24
39167204	5	84
39167304	10	4
39168104	10	100
39176904	5	100
39176904	2	72
39177304	6	22
39177602	25	88
39177802	7	88
39178001	16	36
39178101	13	88
39178101	14	96
39179104	3	94
39190204	9	18
39190701	8	88
39190701	8	100
39191304	11	46
39193120	6	12
39193120	3	20
39194104	4	58
39194304	8	56

Part Number	Figure No.	Page No.
39194304	17A	88
39194304	10	96
39194404	23	28
39194404	22	44
39194404	5	50
39194404	14	102
39194604	7	56
39194604	5	58
39194604	18	86
39195104	3	48
39195404	18	54
36195604	3	48
39197215	15	100
39199020	2	30
39200511	18	20
39201719	1	6
39203804	6	56
39203804	17	68
39206004	13	58
39206004	3	88
39213217	5	10
39214124	7	84
39214124	9	88
39214124	13	96
39214124	2	100
39215811	2	14
39216511	15	12
39216611	13	14
39218106	3	10
39220011	10	12
39220011	12	34

Part Number	Figure No.	Page No.
39220307	5	12
39220404	14	28
39220504	10	102
39224120	3	62
39224120	3	68
39224220	4	68
39238104	3	86
39242001	10	56
39242704	10	74
39246904	6	58
39247504	5	54
39247504	6	72
39247604	17	100
39248415	7	86
39249211	12	40
39256220	20	20
39256220	13	22
39260120	11	20
39260220	8	20
39260607	3	16
39260607	16	24
39260801	15	4
39262921	8	4
39266921	10	8
39271115	29	28
39272315	6	48
39275404	11	40
39275821	6A	86
56JL315X	2	74
59020001	14	88
59040014	17	88

Part Number	Figure No.	Page No.
59100002	16	42
59200006	11	22
59200028	14	20
59200036	2	24
59210019	11	62
AK201012	17	102
AN111015	13	44
AP101236	3	8
AP121064	15	38
AP201025	18	102
BA122003	21	86
BF551037	6	14
BF551037	15	14
BF601207	12	4
CB121042	12	36
CS101128	12	8
DD111011	18	44
DD111012	11	44
DD141022	17	86
DD141227	17	86
DD191015	14	74
DD201002	12	100
DE151046	10	70
DE151047	3	66
DE151047	9	70
DE191010	10	64
DE191010	8	70
DE191011	11	64
DE191028	7	64
DE191029	6	64
DE191033	15	64

Part Number	Figure No.	Page No.
DE191033	5	66
DF161102	12	58
DG101029	9	6
DG101418	8	30
DG101456	10	22
DG121002	12	38
DG151005	4	62
DG161124	2	58
DG161144	9	54
DG171015	17	52
DG171016	4	52
DG171017	19	52
DG171018	5	52
DG171019	6	52
DG181008	8	74
DG181008	25	78
DH101048	9	24
DH101163	11	42
DH101199	6	44
DH101235	12	14
DH101295	11	6
DH101381	3	22
DH101382	14	42
DH101383	9	20
DH101383	17	30
DH101392	14	8
DH101509	3	18
DH101607	5	40
DH101648	13	34
DH111013	16	44
DH111016	17	44

Part Number	Figure No.	Page No.
DH121064	13	36
DH161146	16	58
DH191006	9	72
DH191013	4	72
DH191017	17	74
DH191037	21	96
DJ151074	7	66
DJ151075	8	66
DJ161069	3	56
DJ161229	4	88
DJ161229	18	100
DJ181065	2	28
DJ181065	22	28
DJ181085	9	84
DJ191023	14	64
DJ191029	2	64
DJ191030	3	64
DJ191031	5	64
DJ191056	8	64
DJ191057	1	64
DJ191082	11	74
DJ191083	12	74
DJ201109	9	64
DJ201246	13	74
DJ221019	1	104
DK101225	14	4
DK101284	5	44
DK101352	25	14
DK101386	10	24
DK101595	10	42
DK101596	12	42

Part Number	Figure No.	Page No.
DK101605	13	42
DK111011	20	44
DK111028	8	44
DK121045	22	36
DK121047	15	36
DK141028	6A	86
DK151012	9	68
DK151013	8	68
DK151015	14	68
DK151026	2	60
DK151031	2	70
DK151036	1	68
DK151063	7	70
DK151069	4	70
DK151073	17	70
DK151074	18	70
DK151081	20	68
DK151082	21	68
DK151083	1	70
DK151085	13	70
DK151088	11	70
DK151089	12	70
DK181006	4	76
DK181007	5	76
DK181009	14	76
DK181010	14	76
DK181012	14	76
DK181013	14	76
DK181015	11	76
DK181017	9	76
DK181018	7	76

Part Number	Figure No.	Page No.
DK181019	8	76
DK181020	10	76
DK181021	6	76
DK181022	16	76
DK181023	17	76
DK181025	23	78
DK181028	24	78
DK181073	15	76
DK211007	3	46
DK221024	2	104
DL161015	21	88
DP101191	23	20
DP161145	16	100
DS101154	8	24
DS101215	9	30
DS121126	13	38
DS141012	12	88
DS161125	2	56
DS161287	6	46
DS201025	19	102
DU101225	7	8
DV101048	29	14
EC401030	22	96
EC561023	2	16
FD211006	5	46
JA113403	5	48
JA541048	15	22
JA541233	2	32
JA581314	11	36
JB181223	5	90
JC101034	9	8

Part Number	Figure No.	Page No.
JC151019	3	92
JC151020	8	62
JC181022	21	76
JC181023	20	76
JC201046	10	62
JD131811	6	62
JD191006	8	46
JD351207	12	44
JD351800	17	36
JD401007	11	100
JD561416	5	18
JF511207	7	6
JF511225	8	12
JF511228	1	8
JF531007	2	12
JF531014	3	12
JG 5312 28	3	24
JG 5312 29	4	24
JG122028	2	94
JG131001	2	62
JG131821	5	70
JG171029	20	28
JG181235	3	96
JG181236	2	96
JG181238	2	90
JG191008	4	46
JG232601	9	46
JG232606	10	46
JG351209	9	44
JG351400	13	4
JG511021	3	2

Part Number	Figure No.	Page No.
JG511022	4	2
JG511046	5	4
JG511270	11	8
JG531027	8	12
JG531031	9	12
JG531039	13	12
JG531039	5	42
JG531040	14	12
JG531040	6	42
JG531041	12	12
JG531041	4	42
JG531207	7	24
JG531211	3	24
JG531212	4	24
JG531215	5	24
JG531220	2	8
JG541015	12	22
JG541041	16	22
JG541044	5	22
JG541045	22	20
JG541046	4	20
JG541059	10	20
JG541063	4	22
JG541068	1	4
JG541230	7	30
JG541231	16	30
JG541074	20	22
JG551000	22	14
JG551010	26	14
JG551013	3	14
JG551015	5	30

Part Number	Figure No.	Page No.
JG551017	4	30
JG551019	27	14
JG551020	5	14
JG551021	19	14
JG551021	24	14
JG551022	10	14
JG551022	18	14
JG551025	11	14
JG551027	1	14
JG551213	4	14
JG551214	7	14
JG551215	20	14
JG551220	8	14
JG551222	16	14
JG551223	17	14
JG551224	21	14
JG551225	23	14
JG551227	9	14
JG551228	14	14
JG551423	14	34
JG551427	2	34
JG551428	4	34
JG551443	8	34
JG551447	7	34
JG551449	5	34
JG551451	11	34
JG561009	17	20
JG561010	4	16
JG561011	1	16
JG561012	7	16
JG561013	8	16

Part Number	Figure No.	Page No.
JG561016	9	16
JG561200	10	18
JG561204	15	20
JG561205	16	20
JG561215	11	16
JG561215	11	18
JG561217	13	18
JG561218	12	18
JG561222	5	16
JG561225	10	16
JG561226	19	20
JG571014	24	20
JG571016	25	20
JG571018	3	26
JG571022	2	26
JG571024	14	22
JG581014	30	28
JG591038	3	40
JG591039	6	40
JG591053	13	40
JG591070	10	40
JG591088	15	40
JG591096	7	40
JG591097	8	40
JG601005	6	24
JG601007	6	20
JG601012	13	24
JG601013	11	24
JG601209	8	28
JG601210	7	28
JG601211	18	28

Part Number	Figure No.	Page No.
JG601221	13	28
JG601229	17	28
JG601235	17	28
JG601400	16	28
JG621412	3	42
JG621413	2	42
JG621417	7	42
JL111054	4	48
JL111078	6	50
JL111081	3	50
JL111082	4	50
JL111092	7	48
JL111093	8	48
JL111103	2	50
JL111106	1	50
JL111109	18	52
JL113000	8	54
JL113002	1	54
JL113007	2	54
JL113012	3	54
JL113013	12	54
JL113014	14	54
JL113015	16	54
JL113016	15	54
JL113026	13	54
JL113027	17	54
JL113033	4	54
JL113033	7	72
JL113034	7	54
JL113201	9	58
JL113202	17	58

Part Number	Figure No.	Page No.
JL113207	7	58
JL113209	15	58
JL113210	3	58
JL113212	8	58
JL113400	1	48
JL113401	2	48
JL113800	9	100
JL113803	13	100
JL122001	8	52
JL122002	7	52
JL122003	10	52
JL122004	13	52
JL122006	1	52
JL122008	14	52
JL122009	9	52
JL122013	3	52
JL122014	3	52
JL131000	7	62
JL131001	14	62
JL131004	3	60
JL131004	1	62
JL131005	5	62
JL131006	1	60
JL131203	13	68
JL131209	4	60
JL131211	15	68
JL131216	5	68
JL131218	16	68
JL131219	5	60
JL131220	6	70
JL131225	7	68

Part Number	Figure No.	Page No.
JL131226	11	68
JL131232	6	68
JL131802	12	64
JL131803	3	70
JL131804	1	66
JL131805	6	66
JL131806	2	66
JL131807	4	66
JL131808	5	66
JL131811	12	56
JL131812	13	56
JL151002	2	76
JL151003	3	76
JL151004	13	76
JL151012	12	76
JL151021	1	74
JL151023	18	74
JL151024	1	76
JL151026	2	74
JL151028	5	74
JL151030	6	74
JL151032	18	76
JL151034	7	74
JL151035	9	74
JL151036	26	78
JL151037	22	78
JL151038	2A	74
JL151085	24	86
JL161001	1	72
JL161003	15	74
JL161006	8	72

Part Number	Figure No.	Page No.
JL161008	16	74
JL161010	3	72
JL161200	2	92
JL161201	1	92
JL171018	20	86
JL171019	19	86
JL171020	23	86
JL171022	2A	88
JL171023	2	88
JL171024	5	88
JL171035	12	86
JL171036	11	86
JL171037	8	86
JL171044	1	86
JL171048	6	88
JL171049	4	86
JL171057	1	88
JL171060	14	86
JL171063	9	86
JL171070	28	88
JL171071	29	88
JL171099	2	88
JL171600	2	86
JL171800	13	86
JL171801	16	86
JL171802	10	86
JL171803	15	86
JL181006	5	94
JL181008	1	96
JL181203	6	96
JL181205	1	94

Part Number	Figure No.	Page No.
JL181209	15	56
JL181214	23	88
JL181215	16	88
JL181216	15	88
JL181218	11	102
JL181219	22	88
JL181221	16	56
JL181224	15	52
JL181225	16	52
JL181226	8	84
JL181229	1	84
JL181232	6	84
JL181235	19	76
JL181235	18	96
JL181236	15	96
JL181237	17	96
JL181241	4	90
JL181247	5	96
JL181249	16	96
JL181256	3	28
JL181402	4	56
JL181405	1	56
JL181407	6	94
JL181408	7	94
JL181409	4	94
JL181410	12	94
JL181411	5	56
JL191001	1	46
JL191004	7	46
JL231201	1	106
JL231202	6	106

Part Number	Figure No.	Page No.
JL231203	2	106
JL231404	3	106
JL231405	4	106
JL231600	23	74
JL231601	22	74
JL232808	**21**	**100**
JL233006	**17**	**82B**
JL351000	1	44
JL351002	2	44
JL351003	3	44
JL351005	4	44
JL351200	10	44
JL351201	14	44
JL351202	15	44
JL351600	1	42
JL351800	7	22
JL401002	7	100
JL401003	3	98
JL401004	4	98
JL401005	1	98
JL401006	2	98
JL401012	9	96
JL401400	20	74
JL401401	21	74
JL401402	10	58
JL401403	19	74
JL401600	8	102
JL401801	13	102
JL401803	12	102
JL402001	21	44
JL402201	5	102

Part Number	Figure No.	Page No.
JL402202	6	102
JL402203	1	102
JL402207	16	102
JL402400	1	90
JL402403	8	90
JL402405	1	90
JL402600	6	86
JL403000	2	102
JL403600	14	58
JL501003	1	20
JL511001	2	2
JL511002	1	2
JL511006	4	6
JL511007	5	6
JL511009	3	4
JL511010	2	6
JL511011	3	6
JL511016	3	36
JL511022	6	4
JL511029	11	4
JL511205	6	6
JL511219	7	4
JL511220	6	8
JL511221	5	8
JL511222	8	8
JL521002	4	10
JL541201	1	32
JL541203	7	32
JL541207	12	30
JL541208	5	32
JL541210	13	30

Part Number	Figure No.	Page No.
JL541221	26	20
JL561400	1	18
JL561401	1A	18
JL561404	2	18
JL561405	4	18
JL561407	7	18
JL561408	8	18
JL561409	14	18
JL561410	15	18
JL581000	1	38
JL581004	16	38
JL581007	5	38
JL581009	8	38
JL581010	14	38
JL581015	11	38
JL581016	10	38
JL581018	7	38
JL581022	18	38
JL581023	2	38
JL581024	6	38
JL581025	4	38
JL581027	4	36
JL581201	1	36
JL581204	18	36
JL581205	20	36
JL581206	21	36
JL581300	2	36
JL591048	2	40
JL591052	1	40
JL591075	9	40
JL591086	16	40

Part Number	Figure No.	Page No.
JL591144	4	40
JL601000	6	28
JL601005	12	24
JL601200	15	28
JL601208	12	28
JL601209	21	28
JL601210	1	28
JL601212	11	28
JL601213	24	28
JL601214	25	28
JL601215	19	28
JL601219	10	28
JL601220	9	28
JL601224	12	4
JL601235	21	28
JL71012V	6	80
JL71014K	6	80
JL71014L	6	80
JL71014M	6	80
JL73012V	2	80
JL73014K	2	80
JL73014L	2	80
JL73014M	2	80
JL73022V	3	80
JL73024K	3	80
JL73024L	3	80
JL73024M	3	80
JL74012V	1	80
JL74014K	1	80
JL74014L	1	80
JL74014M	1	80

Part Number	Figure No.	Page No.
JL76012V	5	80
JL76014K	5	80
JL76014L	5	80
JL76014M	5	80
JL76022V	4	80
JL76024K	4	80
JL76024L	4	80
JL76024M	4	80
JL77012V	9	82
JL77014K	9	82
JL77014L	9	82
JL77014M	9	82
JL77022V	8	82
JL77024K	8	82
JL77024L	8	82
JL77024M	8	82
JL78012V	7	82
JL78014K	7	82
JL78014L	7	82
JL78014M	7	82
JN351604	20	102
JU231205	12	106
JU231207	11	106
JU232800	3	100
JU401802	15A	102
JU401803	15	102
JU531021	4	12
JU531027	1	12
JU531213	7	20
JU531213	1	24
JU541005	13	20

Part Number	Figure No.	Page No.
JU551401	6	30
JU551402	10	34
JU551404	1	34
JU551406	9	34
JU571000	1	26
JW171015	4	28
JW181236	3	84
JZ181299	6	100
JZ401013	7	102
KACA0635	9	106
KACA0820	6	54
KACA0830	14	56
KACB0514	6	90
KACB0622	7	106
KACB0825	5	100
KACB0835	19	96
KADA0616	5	28
KADP0516	27	20
KADQ0606	17	24
KADQ0620	13	8
KADQ0620	14	24
KADQ0625	14	40
KADQ0625	1A	42
KADQ0630	14	30
KADQ0630	6	32
KADQ0645	8	32
KAEM0622	9	38
KBQA3506	17	38
KBUA0612	4	84
KBUB0410	8	94
KBUB0512	2	84

Part Number	Figure No.	Page No.
KBUC0516	12	96
KDBE0613	8	106
KEAA1110	4	26
KEBA3715	9	22
LAA00019	10	68
LAC00016	11	54
LAC00017	5	106
LAC00019	2	52
LAC00020	4	74
LAC00022	10	88
LAC00024	6	16
LAC00029	2A	106
LAC00034	30	88
LAC00037	9	94
LAC00054	11	94
LAD00037	13	64
LAD00040	26	28
LAD00040	10	106
LAD00055	9	42
LAD00077	5	20
LAE00010	7	44
LAE00014	2	22
LAE00016	8	6
LAE00017	28	14
LAE00018	7	26
LBB00004	3	38
LBB00006	12	20
LBR00002	8	96
LBS00001	4	96
LBU00009	1	100
LCA00008	4	100

Part Number	Figure No.	Page No.
LCA00009	12	68
LCD00001	11	12
LCJ00002	16	62
LCJ00002	19	68
LDA00007	24	88
LDA00007	7	96
LDA00008	2	4
LDA00013	10	54
LDB00007	7	90
LDB00010	8	42
LDB00020	3	30
LDB00029	15	62
LDB00029	18	68
LEB00001	4	8
LEB00001	28	20
PA402204	19	100
PA181292	24	96
PA181293	25	96
YJL02006	23	96

Part Number	Figure No.	Page No.